Wasatch Boulevard
Gravel Pit Area Master Plan
Executive Summary

Prepared For:
Cottonwood Heights City
and
Wasatch Front Regional Council

October 2016

FEHR PEERS

ZIONS BANK ZBPF PUBLIC FINANCE

blū

Table of Contents

Introduction 2
Corridor Vision 2
Market Analysis Summary 3
  Population and Employment Projections 3
  Development Industry Feedback 4
  Recommended Land Uses 6
Land Use Vision 6
Transportation Impacts and Needs 10
  Traffic Analysis Results 12
  Proposed Corridor Improvements 13
Recommended Action Items 18
  High Priority Action Items 18
  Moderate Priority Action Items 19

Figure 1: Three- and Five-Mile Radius around Site 3
Figure 2: Rendering of Proposed Development at Gravel Pit, from the West 7
Figure 3: Rendering of Proposed Development of Gravel Pit, from the South 7
Figure 4: Rendering of Proposed Development at Gravel Pit, from the North 8
Figure 5: Rendering of Proposed Development at Gravel Pit, “Main Street” Concept 8
Figure 6: Rendering of Proposed Development at Gravel Pit, Office Buildings 9
Figure 7: Rendering of Proposed Development at Gravel Pit, Residential Neighborhoods 9
Figure 8: Traffic Impact Analysis Intersections 11
Figure 9: Wasatch Boulevard Cross-Section, Option One 14
Figure 10: Wasatch Boulevard Cross-Section, Option Two 16

Table 1: Population and Employment Projections Surrounding Gravel Pit Site 4
Table 2: Jobs-Housing Balance Comparisons 4
Table 3: Recommended Land Uses 6
Table 4: Traffic Impact Analysis Results 12

Introduction

Wasatch Boulevard is a major gateway into Cottonwood Heights City, with a crucial and keystone property: the gravel pit site, located on the east side of Wasatch Boulevard between 6200 South and Fort Union Boulevard. This property is the last large area of undeveloped land within the city limits. Potential development at the property could be vital to economic growth in Cottonwood Heights, and would be regionally valuable due to its critical location at the mouth of Big Cottonwood Canyon. The opportunities presented by this highly visible property will serve future generations of local residents and property owners, regional recreational users, and destination travelers who come to this area to play, to shop and to live.

Cottonwood Heights City commissioned this Wasatch Boulevard Gravel Pit Area Master Plan to answer several major questions:

- What is the market potential for growth at the gravel pit, and by when?
- What could development at the gravel pit look like?
- What are the transportation impacts and needs associated with that potential development?
- What are the transportation impacts and needs without the development?

These questions were explored and analyzed by a team of Cottonwood Heights City officials and consultants, in collaboration with a Steering Committee. The Steering Committee included staff from Wasatch Front Regional Council, the Utah Transit Authority, the Utah Department of Transportation, and a representative of the gravel pit's owner. The consultant team was led by Fehr & Peers, with support from Zions Bank Public Finance and blu line designs. This document provides a brief executive summary of the market analysis, land use vision, and transportation needs for Wasatch Boulevard between the I-215 interchange and Fort Union Boulevard, specifically addressing the gravel pit site. Exhibits attached to this summary include the market analysis report, conceptual site layouts, a traffic impact study based on the land use recommendations of the market analysis, and minutes from the Steering Committee meetings.

Corridor Vision

The team worked together to develop an overall vision for the section of Wasatch Boulevard near the gravel pit, which is summarized briefly below:

> *"Wasatch Boulevard is the regional gateway to the Cottonwood Canyons, home to year round recreational activities. It will also be the City's corridor that facilitates exciting new development with views of the Salt Lake Valley. Wasatch Boulevard should be carefully planned to ensure that all modes of travel are included, with an emphasis on new and expanded transit. Wasatch Boulevard is well-used by all types of cyclists, and these users should have a safe and pleasurable experience. Wasatch Boulevard should be planned so that it facilitates new development which is vital to Cottonwood Heights, and also functions as an efficient entryway for those residents and visitors visiting the Cottonwood Canyons, which are the gems of the Wasatch Range."*

Market Analysis Summary

The purpose of the market analysis (conducted by Zions Bank Public Finance) was to understand what kind of development would be feasible at the site, while accounting for projected demographic changes, employment trends and forecasts, and industry feedback on the site's development potential. The market analysis also provided recommendations for future land uses at the site, assuming a future buildout year of 2040.

Population and Employment Projections

The market analysis identified the potential for growth in terms of both population and employment within a three-mile and a five-mile radius of the site (as shown in Figure 1 below), to better understand future demand for both housing and job centers. Population and employment data came from projections developed by Wasatch Front Regional Council, using data generated by the Governor's Office of Management and Budget.

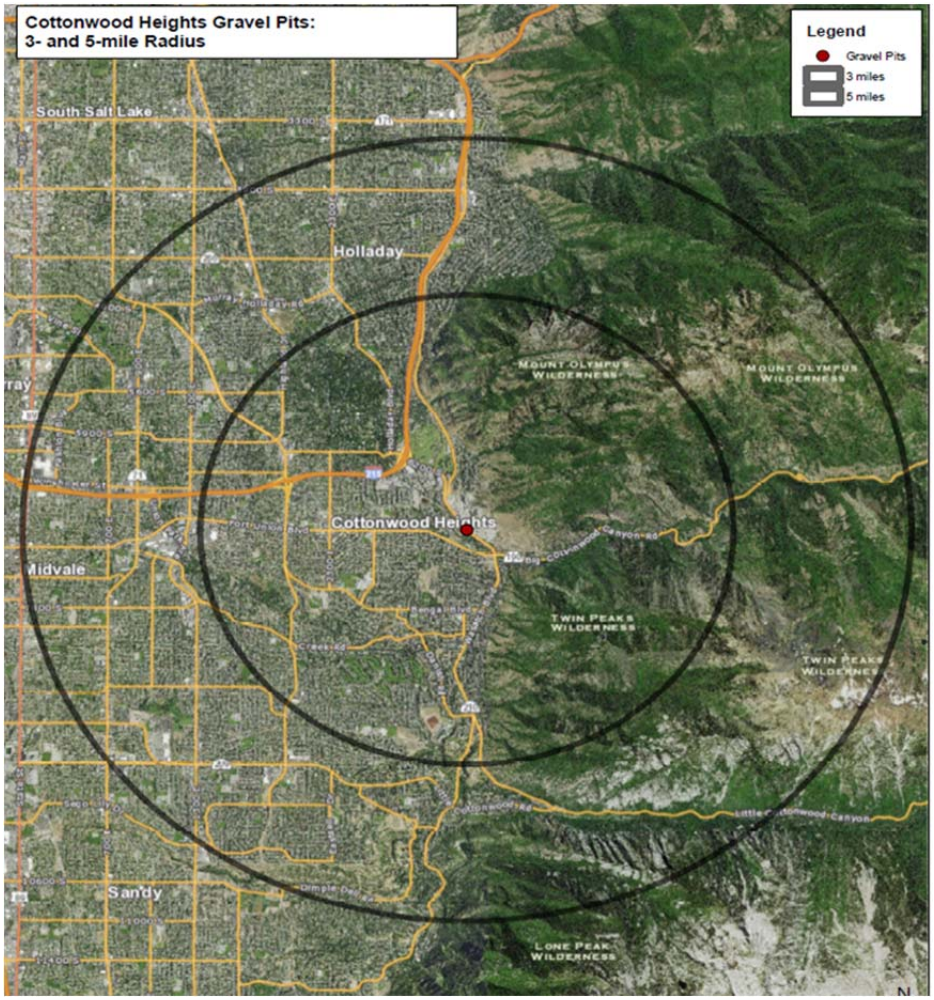

Figure 1: Three- and Five-Mile Radius around Site

Table 1: Population and Employment Projections Surrounding Gravel Pit Site								
	2015		2020		2030		2040	
	Pop.	Emp.	Pop.	Emp.	Pop.	Emp.	Pop.	Emp.
Three-Mile Radius	48,744	21,704	47,260	21,247	48,895	21,547	49,815	22,168
Five-Mile Radius	175,117	68,980	170,770	68,974	178,270	69,973	184,255	72,872

It should be noted that these projections do not show significant growth in the area, for population or for employment. There are several reasons for this. First, the projections do not account for any growth occurring at the gravel pit site, and instead assume that the site would remain a gravel pit through 2040. Second, there are relatively few vacant properties in the surrounding area that could host new growth. Third, relatively little new population or employment growth is projected in this portion of the Salt Lake Valley, when compared to more newly-established communities with ample open land available for new development.

Another factor for consideration is jobs-housing balance. This represents the number of jobs available per household in the community, and a rule-of-thumb from the American Planning Association is to have 1.3-1.7 jobs per household. Table 2 demonstrates how several local communities including Cottonwood Heights fare when this rule-of-thumb is applied. While neighboring communities like Midvale and Sandy have fairly favorable ratios, Cottonwood Heights is slightly low on jobs-housing balance with 1.17 jobs per household currently. Therefore, the gravel pit site represents an opportunity to create more employment options for Cottonwood Heights residents.

Table 2: Jobs-Housing Balance Comparisons				
	Population	**Employment**	**Households**	**Jobs/Household**
Cottonwood Heights	**34,559**	**13,441**	**11,443**	**1.17**
Holladay	**27,385**	**5,628**	**9,068**	**0.62**
Midvale	**29,391**	**14,499**	**9,732**	**1.49**
Sandy	**90,450**	**43,124**	**29,950**	**1.44**
Murray	**48,745**	**43,011**	**16,141**	**2.66**

Development Industry Feedback

The market analysis included interviews with multiple real estate brokers for retail, office, and residential projects to get their feedback on the development potential of the site. Their insights are summarized briefly below; more detail is available in Exhibit A, the Gravel Pit Market Analysis.

- **On-Site Analysis and Records Research**: There are some aspects of the site that will need further investigation. For example, geotechnical analysis conducted on the adjacent property indicated the presence of several fault lines running north-south through that property, and it is likely that these fault lines continue southward into the gravel pit site. This may result in some

restrictions on where development can occur on the site. A geotechnical analysis of the gravel pit site could also reveal additional issues with soil stability, slope erosion, or other concerns. Similarly, development plans on adjacent properties have revealed underlying utility easements that may apply to the gravel pit as well.

- **Competition**: Other development projects are currently taking shape nearby or are under construction, but brokers did not anticipate that this would negatively affect the potential for development at the gravel pit site. Rather, this would create some degree of synergy and possibly increase demand for development at this site.
- **Financial Feasibility**: Interviewees indicated that the market would likely support development of five- to six-story buildings in the near term, and that taller buildings (i.e., ten stories) may be more financially feasible later on. For example, achievable rents for office space in high-end suburban locations are around $27-$28 per square foot, and would need to reach $30-$32 per square foot within five years to make construction of six-story buildings financially feasible. To reach eight- to ten-story buildings, rents would need to exceed $35 per square foot. Greater than ten stories is less feasible given financial constraints, but other communities (such as Sandy) have made it more viable for developers by offering financial incentives.
- **Residential Costs**: Construction costs are currently too high to attract for-rent and for-sale development over five stories, and this is complicated further by the need for parking garages if residential buildings greater than five stories are desired. Construction of taller residential buildings may be financially feasible within five to ten years. Currently, brokers believe that the market could support five-story apartment buildings with 1,100- to 1,200-square-foot units, or condominiums that are slightly larger. Construction of residential apartment buildings could be feasible with rental rates of $1,100-$1,300 per month (current rental rates are around $950-$1,100 per month) or price points of $150-$175 per square foot for condominiums. If the views are high quality, then the higher rates are probably more achievable.
- **Retail**: To support retail, rents need to be between $16 and $22 per square foot. This is consistent with rents already achieved in Cottonwood Heights. Retail plans at this site should be designed to complement future construction on the Dean's property to the north, rather than competing with it.
- **Demand for Lodging**: The site could hold appeal for hotel and lodging opportunities, particularly near the corner of Wasatch Boulevard and Fort Union Boulevard. The land use plan concepts have incorporated this idea, placing a proposed hotel in the southern part of the site. The Canyon Centre project will likely absorb about half of the remaining demand for hotel rooms in the immediate area, but with other additional development on the gravel pit site, there could be demand for around 150 hotel rooms at this site. Transportation planning efforts in the canyons will have an effect on tourist demand for hotels at this site: if congestion getting up the canyons is perceived to be a problem, tourists may focus their lodging searches on the resorts rather than in Cottonwood Heights or other gateway communities. However, interviewees indicated that this site could represent an opportunity for less-expensive skier hotel rooms compared to

rooms at the resorts. For example, in 2015, average ski season room rates within the canyons were nearing $425 per night, whereas the statewide average for hotel rooms was $98 per night.

Recommended Land Uses

Recommended land uses are based on the population and employment projections, as well as the feedback received from specialists in the development industry. The recommended land uses are separated into two phases (2020-2030, and 2030-2040) and are summarized in Table 3.

Table 3: Recommended Land Uses

Type	Acres	Total Building Area	Absorption: 2020-2030	Absorption: 2030-2040
Office	50	Up to 2,000,000 square feet	50,000 to 100,000 square feet per year	Over 100,000 square feet per year
Residential	25-30	Up to 3,000 units	150 to 200 units per year	100 to 150 units per year
Retail	15-20	250,000 square feet	25,000 square feet per year	NA
Lodging	5	Upwards of 150 rooms	150 rooms	Dependent on offices

Land Use Vision

Conceptual land use plans were developed by blu line designs for the gravel pit, based on the land use recommendations shown in Table 3. These conceptual plans illustrate how the recommended land uses could be accommodated throughout the gravel pit site, and how people and vehicles can circulate within the site on an internal roadway and pathway network. The following figures illustrate how buildings could be massed and arranged on the site.

Figure 2: Rendering of Proposed Development at Gravel Pit, from the West

Figure 3: Rendering of Proposed Development of Gravel Pit, from the South

Figure 4: Rendering of Proposed Development at Gravel Pit, from the North

Figure 5: Rendering of Proposed Development at Gravel Pit, "Main Street" Concept

Figure 6: Rendering of Proposed Development at Gravel Pit, Office Buildings

Figure 7: Rendering of Proposed Development at Gravel Pit, Residential Neighborhoods

The development concept illustrated by these renderings encompasses the land use recommendations made by the market study discussed earlier in this report. The conceptual plans create several key nodes within the development:

- Office buildings are concentrated in the northern half of the site, enveloping a central parking structure. In these renderings, some of the office buildings are shown at the ten-story level identified for the 2040 buildout phase in the market study.
- A transit hub is located near the office building complex central to the master plan. As per UTA recommendation, the transit hub assumes enough space to park six buses with adequate turnaround space for those vehicles. This study assumes that UTA buses would circulate through the gravel pit site rather than bypassing it on Wasatch Boulevard and proposes using the site's parking for a park-and-ride. The project anticipates three access points proposed on Wasatch Boulevard with two of them being signalized (and discussed further in the Transportation Impacts and Needs section of this Summary) that would provide access for transit and private vehicles to the site.
- Higher density residential buildings are projected throughout the site, and single family residential lots are proposed along the eastern edge.
- A mixed-use "Main Street" concept runs north-south in the southern half of the site, combining ground-floor retail with upper levels of office and apartments or condominiums, along a pedestrian-friendly streetscape.
- A proposed hotel is located at the south end of "Main Street", along the southern boundary of the gravel pit.
- The conceptual plans include 12,537 parking stalls in structured parking distributed throughout the site, as well as 2,079 surface parking stalls. The renderings show recreational green space on top of one of the parking structures, which could provide an amenity to residents and others in this development.

A plan-view layout of the conceptual plans is provided in Exhibit B.

Transportation Impacts and Needs

Fehr & Peers completed a traffic impact analysis to simulate existing traffic conditions along Wasatch Boulevard, future traffic conditions on Wasatch Boulevard without development at the gravel pit, and traffic conditions associated with proposed future development at the gravel pit. This analysis is summarized below, and is provided in more detail in Exhibit C. The future development assumptions were based on the recommended land uses from the market analysis referenced above. Traffic was analyzed at several major intersections along the Wasatch Boulevard Corridor, shown in Figure 8:

- I-215/6200 South Interchange
- 6200 South/3000 East
- 6200 South-Wasatch Boulevard/Millrock Drive
- Wasatch Boulevard/Fort Union Boulevard
- Wasatch Boulevard/Bengal Boulevard

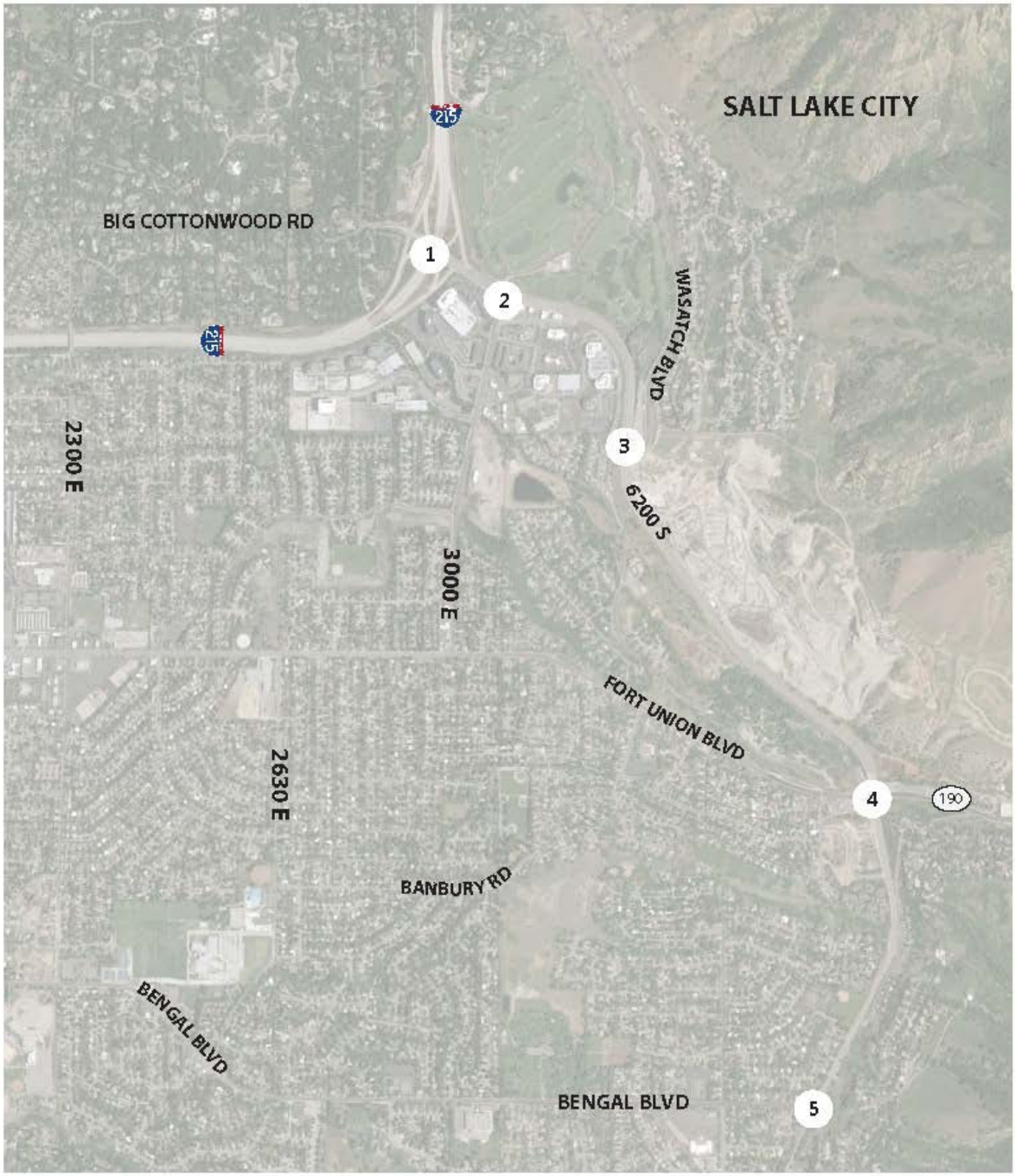

Figure 8: Traffic Impact Analysis Intersections

For the analysis of future traffic conditions assuming development at the gravel pit site, three access points onto Wasatch Boulevard were assumed (two as signalized intersections and one as an unsignalized right-in/right-out intersection). An additional unsignalized access was assumed from the gravel pit site onto old Wasatch Boulevard, just east of its intersection with Millrock Drive/6200 South.

Traffic conditions are reported using a metric called Level of Service (LOS), which is a calculation of the average amount of delay experienced by people in vehicles at individual intersections. The LOS scale ranges from A (minimal delay) to F (high levels of delay).

Traffic Analysis Results

Table 4 shows the results of the traffic impact analysis. For the existing (2015) conditions, most of the study intersections operate at LOS D or better for the existing conditions during the AM peak hour, except for the I-215 / 6200 South interchange, which operates at a LOS E. For the future 2040 background conditions most of the study intersections operate at LOS D or better during the AM peak hour, except for the I-215 / 6200 South interchange, which operates at a LOS E due to many high volume movements that experience high levels of delay.

For the future (2040) plus project conditions most of the intersections operate at a LOS C or worse during the AM peak hour. During the PM peak hour most of the study intersections operate at a LOS F. This includes two proposed signalized accesses, between Millrock Drive and Fort Union Boulevard, to the gravel pit (these are referred to as Access 1 and Access 2). 3000 East / 6200 South is the only intersection that does not operate at LOS F during the PM peak hour. I-215 / 6200 South and Access 4 (a proposed right-in/right-out access located between Access 1 and Access 2) both operate at LOS F during both AM and PM peak hours.

Figures for each intersection with their respective traffic volumes and LOS as well as complete LOS summary reports for all scenarios are contained in the traffic impact study in Exhibit C.

Table 4: Traffic Impact Analysis Results

Intersection		Existing 2015	Future 2040 Background	Future 2040 Plus Project
Location		LOS & Sec/Veh	LOS & Sec/Veh	LOS & Sec/Veh
I-215 / 6200 South	**AM**	**E / 63.9**	**E / 68.4**	**F / 91.3**
	PM	**E / 61.9**	**E / 76.6**	**F / 95.5**
3000 East / 6200 South	**AM**	**C / 25.5**	**D / 38.3**	**D / 36.3**
	PM	**F / 101.7**	**F / 118.0**	**D / 49.4**
6200 South-Wasatch Blvd / Millrock Dr	**AM**	**B / 15.1**	**B / 17.7**	**C / 31.3**
	PM	**C / 22.7**	**C / 34.9**	**F / 112.5**
Wasatch Blvd / Fort Union Blvd	**AM**	**B / 13.1**	**B / 15.3**	**E / 69.1**
	PM	**C / 35.3**	**E / 76.2**	**F / 171.1**
Wasatch Blvd / Bengal Blvd	**AM**	**D / 51.1**	**D / 41.7**	**E / 70.0**
	PM	**E / 61.1**	**F / 107.1**	**F / 133.6**
Access 1	**AM**	**-**		**D / 36.3**
	PM	**-**		**F / 183.8**
Access 2	**AM**	**-**		**E / 60.0**

	PM	-	F / 159.1
Access 3	AM	-	E / 40.3
	PM	-	E / 39.4
Access 4	AM	-	F / 95.6
	PM	-	F / 689.2

Proposed Corridor Improvements

The traffic impact analysis identified several mitigations that are recommended to ease traffic conditions, including dual left turns at the proposed new signalized intersections on Wasatch Boulevard to access the gravel pit site, as well as signal optimization at the intersection of 3000 East/6200 South. While these mitigation items may serve to reduce congestion at intersections related to the project, there may still be corridor-wide improvements needed. These are summarized below.

- **Additional Travel Lanes**: The combination of recommended land uses identified in the market analysis could potentially result in an additional 40,000 trips per day on Wasatch Boulevard. This degree of increase could require addition of new vehicle travel lanes in each direction to accommodate the demand. However, the transportation industry is changing rapidly, and so are the ways by which people travel. These changing travel behaviors, in addition to the impending arrival of autonomous and connected vehicles, may reduce the long-term need to expand the roadway with additional travel lanes. Other strategies of managing the existing pavement width, such as implementation of reversible lanes, may also help accommodate travel demand. A traffic management association (TMA) for the Knudsen's Corner area may also be a valuable strategy in managing travel demand for this area.
- **Exclusive Transit Lanes**: The 2040 Long Range Transportation Plan produced by the regional transportation agencies identifies Wasatch Boulevard as a bus rapid transit (BRT) corridor. The Utah Transit Authority, through their participation in this study, indicated that BRT on Wasatch Boulevard would likely require exclusive transit lanes.
- **On-Street Bicycle Facilities**: Wasatch Boulevard is an extremely popular cycling route, connecting riders from across the Wasatch Front with the recreational opportunities contained within Big and Little Cottonwood Canyons. Buffered bike lanes on Wasatch Boulevard could be used to accommodate this demand within the roadway cross-section.

Figures 7 and 8 on the following pages demonstrate how these various corridor needs could be accommodated on Wasatch Boulevard.

9’ BUFFERED BIKE LANE AND GUTTER	**12’** BUS LANE	**11’** DRIVE LANE	**11’** DRIVE LANE	**12’** REVERSIBLE DRIVE LANE	**11’** DRIVE LANE	**11’** DRIVE LANE	**12’** BUS LANE	**9’** BUFFERED BIKE LANE AND GUTTER

98’ PROPOSED CROSS-SECTION

88’ EXISTING CROSS-SECTION

In Option One on the previous page, the third travel lane is accommodated by implementing a reversible lane in the center and eliminating the center median currently in place on Wasatch Boulevard. The reversible lane would shift direction according to the peak commute patterns: in the morning, the center reversible lane would accommodate northbound traffic to I-215, and in the evening, it would accommodate southbound traffic from the interchange to Fort Union Boulevard. In this scenario, exclusive transit lanes are placed on the outside lanes, adjacent to a buffered bicycle lane. Pedestrians on Wasatch Boulevard can use sidewalks behind the curb. Future study should be conducted of this option to verify that there is enough difference between the off-peak and peak direction traffic volumes to make a reversible lane function well.

The primary benefit of the reversible lane is reduction of roadway footprint expansion – the current cross-section on Wasatch Boulevard is approximately 88’, which would expand to roughly 98’ in Option One. Future evaluation of a concept like this should include consideration of hardware needed to manage the direction of travel in the reversible lane, and accommodations needed at intersections for the reversible lane.

9'	12'	12'	12'	14'	14'	14'	12'	12'	12'	9'
BUFFERED BIKE LANE AND GUTTER	DRIVE LANE	DRIVE LANE	DRIVE LANE	BUS LANE AND BUFFER	BUS STOP	BUS LANE AND BUFFER	DRIVE LANE	DRIVE LANE	DRIVE LANE	BUFFERED BIKE LANE AND GUTTER

132' PROPOSED CROSS-SECTION (118' WITHOUT BUS STOP)

88' EXISTING CROSS-SECTION

In Option Two on the previous page, the roadway footprint is widened from 88' to 132' to accommodate a third travel lane in each direction, in addition to exclusive center-running lanes for bus rapid transit. A station is shown for illustrative purposes, to demonstrate the additional width needed; future station locations for any transit lines will require more detailed analysis. Transit feature dimensions in Option One and Option Two were taken from UTA standard design documents, available via UTA's website at www.rideuta.com. Stakeholders at UTA and UDOT indicated that Option Two was the preferred cross-section for those agencies. Cottonwood Heights, UDOT, and UTA should re-evaluate options for Wasatch Boulevard as the timeframe for development of the gravel pit gets closer.

Recommended Action Items

Many issues need to be addressed at the site in order to make development feasible and realistic, and the City can be proactive about encouraging development at the site by working with the property owner. Recommended action items are organized as "high priority" or "moderate priority". High priority action items should be undertaken within the next one to five years, while moderate priority action items can unfold over the next ten years.

High Priority Action Items (One- to Five-Year Horizon)

Near-term action items include site-specific, off-site, and marketing needs.

- **Geotechnical Study and Fatal Flaw Analysis**: A geotechnical study should be conducted within the next 12 to 24 months. Geotechnical analysis on the property north of the gravel pit has identified a number of potential fault lines and other issues, and these likely extend into the gravel pit property. There are also reportedly large utility lines underneath these properties, and these may or may not be relocatable. The City would benefit from a thorough understanding of these technical constraints, which could limit the amount of buildable area available on the site.

- **Shared Parking Analysis**: Parking is expected to consume a large amount of space on the site and at a considerable expense. Parking that would be required based on current codes and the proposed land uses would be over 14,000 spaces, most of which would need to be in structures to accommodate the other land uses planned at the site. However, office space and multi-family uses can often share parking spaces, which may reduce the need for overall parking. A shared parking analysis would identify the degree to which office, retail, and residential land uses complement or compete with one another for parking resources, and recommend a reduced number of parking spaces. This in turn could make the site more competitive by reducing funds spent for over parking the site and maximizing economically vital land use activity. Ongoing coordination with the Mountain Accord planning effort and with the Utah Transit Authority will shape needs for the park-and-ride facility planned for the site, and should be considered separately from parking needs for land uses proposed on site.

- **Improve the I-215/6200 South Interchange**: This interchange is one of the more costly transportation needs in this area, and its operations are already compromised as observed in the field and shown in the traffic impact study in Exhibit C. Moreover, there are no improvements to this interchange identified on the WFRC RTP, the UDOT LRP, or the UDOT STIP. Cottonwood Heights and Holladay both have an interest in finding ways to improve how this interchange functions, as does UDOT, for many reasons – traffic congestion, air quality, and safety among them. It is recommended that the cities work together with UDOT to evaluate configurations or modifications for this interchange to work better.

- **Market and Brand the Site**: Cottonwood Heights should establish a marketing and branding campaign to generate excitement about the site among the larger development community. Currently the I-15 corridor in southern Salt Lake County and northern Utah County is garnering

attention from the legislature development community and has momentum for growth. In order to redirect some of this attention, Cottonwood Heights should develop a campaign to advertise and brand this site, whether that is as a "second downtown", "resort village", or something else. Press releases, articles, or other media could push some momentum towards the gravel pit's redevelopment if members of the development community can imagine what it could be in the future. Prior to this effort, Cottonwood Heights should decide internally on how to brand this site. Taking City officials on a tour of other areas or communities with similar properties (mountainous or canyon terrain, transit hubs, good interchange access) may help the City establish an appropriate brand that generates enthusiasm for development.

- **Create a Financing Method**: Establish a Community Reinvestment Area for the site, which would allow Cottonwood Heights to start putting away tax money to use towards development at the site. This would need to be for a defined area or number of acres, and would require approval from other taxing districts in the area; they would sign off on redirecting some of their revenue towards the CRA, with the assumption that they would gain more taxes back in the long run because the property would be worth more when developed than it is now. A CRA could potentially make this site more competitive to developers, and may be valuable given the momentum occurring along the I-15 corridor.

Moderate Priority Action Items (Ten Year Horizon)

- **Re-Evaluate Parking Needs Periodically**: The need for parking spaces is changing as the transportation industry evolves. Transportation networking companies like Uber and Lyft are actively reducing consumer's needs for their own individual vehicles, and these also reduce the need for parking in general. Moreover, as autonomous vehicles begin entering the overall vehicle fleet, this may also reduce the need for on-site parking; people may be dropped off at their destinations by a driverless vehicle that then departs to pick up a new passenger. It is too early to know, in 2016, how these needs may change over time. However, with a longer-term planning horizon in place for this site, it affords Cottonwood Heights the opportunity to reevaluate needs for expensive and land-intensive parking garages or lots prior to constructing them. Other communities have approached this issue by building parking garages that can be flexed to accommodate other land uses as needs change.

- **Stay Involved in Mountain Accord**: The Mountain Accord planning process focuses on the Wasatch Mountains and has identified several methods to balance transportation, recreation, economic, and environmental needs in these lands. Mountain Accord is currently being led out of the Wasatch Front Regional Council, and is studying options for skier transportation in Big and Little Cottonwood Canyons, among other things. Mountain Accord efforts may include recommendations at the gravel pit, and Cottonwood Heights should stay involved in that planning process to help shape those recommendations in a way that is most appropriate for the city, this site, and the region.

- **Proactively Manage Travel Demand**: The gravel pit is only one slice of a large employment node with significant transportation needs and ongoing congestion, and which is split between two cities: Cottonwood Heights and Holladay. These two cities can work together to manage travel demand through creation of a Traffic Management Association, with staff to help major employers encourage non-SOV travel modes, shift travel times out of the peak commute hours, establish shuttles from major transit routes, and other strategies designed to manage congestion and mobility.

- **Enlist National Professional Advice**: Cottonwood Heights may benefit from the advice of organizations such as the Urban Land Institute (ULI) on this complex development site. The ULI Rose Center for Public Leadership hosts fellowships for study cities who are struggling with unique development issues. Cottonwood Heights may wish to apply for one of these fellowships, which provides peer-to-peer learning and information on best practices and could bring outside expertise to the site and the City.

- **Establish Grading and Remediation Plans**: At this writing, there were no documents available that detailed the final grading for the site after mining operations were complete, and no information on remediation steps that might be necessary before development could commence. Cottonwood Heights should approach the property owner to discuss preparation of these plans; future development of the site will depend on how much land is available after grading is complete and retaining walls have been placed as needed to hold back the remaining slope. Grading plans will also affect internal circulation on the site, such as connection points to external roads and road grades on-site.

- **Create Design Standards**: The gravel pit site is contained within a F-1-21 (Forestry) zone. The City's Land Use Plan designates this property as "Mixed Use." The site is also designated as the only Tier 1 area of the Planned Development District Zone, which, if applied for and approved, establishes several requirements for design features such as building transparency at street level, landscaping percentages, and public spaces. These regulations can be further supplemented with more detailed requirements for the appearance of the development. Cottonwood Heights may wish to establish site- or zone-specific design standards that support the desired branding and image of the site. This could include building materials and colors, landscaping requirements, signage styles and sizing, and other elements that create a coherent and unique design framework for the site.

EXHIBIT A: GRAVEL PIT MARKET ANALYSIS

Cottonwood Heights, Utah

Gravel Pit Market Analysis

ZIONS ZPFI PUBLIC FINANCE, INC.

February 2016

Executive Summary

Aerial Photograph of Subject Property

This executive summary highlights the findings contained in the attached report concerning developmental feasibility of the Gravel Pit, located in Cottonwood Heights, Utah. Presently, the site is utilized for mining and construction purposes, but is intended to be converted into a site that will ultimately be supportive of residential and commercial (including office, retail, and lodging/hotel) development. The following pages will highlight the potential for the varying use types, with the table below reflecting a possible phasing schedule:

Type	Acreage	Total Bldg. Area	Absorption 2020-2030	Absorption 2030-2040

Office	50	Up to 2,000,000 sq.ft.	50,000 to 100,000 sq.ft. per year	100,000+ sq.ft. per year
Residential	25-30	Up to 3,000 units or near 3.6 million sq.ft.	150 to 200 units per year	100-150 units per year
Retail	15-20	250,000 sq.ft.	25,000 sq.ft. per year	NA
Lodging	5	Upwards of 150 rooms	150 rooms	Dependent on offices

The Gravel Pit property is situated on Wasatch Boulevard, with desirable frontage on a busy arterial. The site extends to the intersection of Fort Union Boulevard and Wasatch Boulevard, which is also the entrance to Big Cottonwood Canyon and its associated recreational opportunities. Traffic activity in the area is high, with near proximity to major freeways as well as densely developed office and retail complexes.

Development feasibility of the Cottonwood Heights' Gravel Pit is first analyzed within the following report by considering fundamental demographic information. Particularly, emphasis is placed on current and projected population, employment trends and forecasts, and likely population and job growth anticipated with development of the Gravel Pit. Consideration is also made for retail buying power, retail and office absorption, and other data market data points. The following tables highlight fundamental statistics pertinent to forecasting the feasibility and potential impact of development of the Gravel Pit.

Demographic Highlights

Population Projections - WFRC

	2015	2020	2030	2040
Canyon Entrance				
3 Miles	48,744	47,260	48,895	49,815
5 Miles	175,117	170,770	178,270	184,255

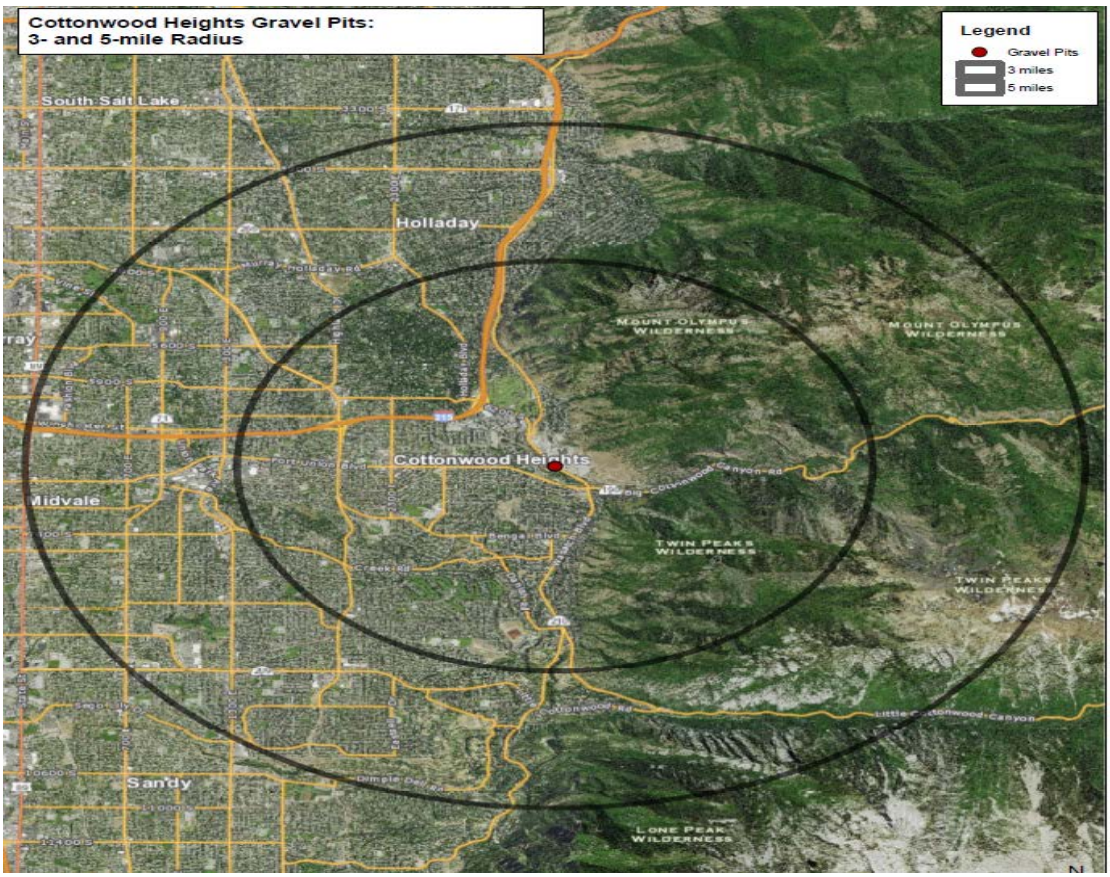

Population is noted to be influenced by the mountain topography which characterizes the eastern boundary of Cottonwood Heights and the Gravel Pit. The table below shows the potential for population increases with development of the Gravel Pit from roughly 5,840 to 9,636 residents. At a relative midpoint of 7,500, a total of roughly 3,000 additional residences could be supported at the site (in addition to other, non-Gravel Pit related growth). With a current population of just less than 35,000, the Gravel Pit could ultimately contain 15 to 20 percent of the City's population base.

Potential Population Growth (with Gravel Pit development)

	Amount
Jobs Created	6,000 - 10,000

Capture Rate of 1/3	2,000 – 3,300
Household Size	2.92
Population Increase	5,840 – 9,636

Employment Projections (without Gravel Pit development) - WFRC

	2015	2020	2030	2040
Canyon Entrance				
3 Miles	21,704	21,247	21,547	22,168
5 Miles	68,980	68,074	69,973	72,872

Future employment growth in Cottonwood Heights, without the Gravel Pit, is projected to be relatively limited. While the unemployment rate is anticipated to remain at a healthy level, job creation (without development of the Gravel Pit) is not forecast to be significant. However, potential employment gains from added development at the Gravel Pit could result in upwards of 6,000 to 10,000 new employees in the City.

Cottonwood Heights' employment ratio is shown at 0.39 jobs per capita, which shows that the City is largely residential in nature. It additionally indicates, as compared to most other, neighboring communities, that the City could support more employment. If population were to increase by 7,500 residents (through development of the Gravel Pit only), with an employment increase of 8,000 jobs (again, Gravel Pit only), a revised employment ratio would be shown closer to 0.50 jobs per capita.

Jobs Per Capita Ratios

	Population	Employment	Jobs Per Capita Ratio
Cottonwood Heights	**34,559**	**13,441**	**0.39**
Holladay	27,385	5,628	0.21
Midvale	29,391	14,499	0.49
Sandy	90,450	43,124	0.48
Murray	48,745	43,011	0.88

Developer and Market Supported Construction Estimates for the Gravel Pit

As detailed within this report, broker and developer interviews were conducted in order to better understand what is supportable at the Gravel Pit site. While some firms and individuals desired to remain anonymous, other entities surveyed include Boyer Development, Millrock Capital, PEG Development, Cowboy Partners, The Woodbury Corporation, Development Associates, Compass Development, and others. Brokers for office, retail, and residential uses were also interviewed, representing the firms of Coldwell Banker, Commerce RE, Situs Group, Marcus & Millichap, and several others.

Basic Considerations

- The site contains a total of 150 acres
- A total of 90 to 100 developable acres may result due to assumed earthquake faults and geological issues. The assumption for 90 to 100 acres follows what appears to be the fault lines of a neighboring site (the Dean property)
- There are significant concerns with the Dean property and its ability to support future development, according to ownership and developer representatives. The grade, easements, and fault lines result in limited developable area. The long-term plan is for horizontal mixed-use design, with potentially a hotel and a large retailer
- Several developers question the ability to develop significant density at the Gravel Pit due to concerns about slope and soil conditions (as well as likely fault lines). Most market participants have had numerous conversations with existing owners over the years and believe that expectations are overly optimistic
- Planned, near-term (and ongoing) developments in the immediate neighborhood will likely improve the desirability of the area. The developments are not anticipated to compete supply-wise with the Gravel Pit, due primarily to their timing and product offerings

Office Use – Developer/Broker Perceptions & Market Data

- Potential of up to 2,000,000 square feet of office space could be supported at site

- Absorption near 50,000 to 100,000 square feet a year, starting in five years (near 2020-2021), accelerating in future years as more development takes place and momentum builds
- Construction in excess of 10 stories will likely not occur within the next ten years due to financial constraints (i.e., costs of construction are not supported by rental rates)
- Buildings should have floor-plates at less than 15,000 to 20,000 square feet. Larger plates could be supported for shorter buildings
- Financial feasibility studies show support for six-story buildings with near 100,000 square feet; future years may support larger buildings both in terms of building heights and total overall area
- Offices should be situated near the front of the site with retail uses utilizing the exposure from the right-of-way, and residential buildings located in the quieter, rear sections that may have more hillside views
- Achievable rents will need to be near $30.00 to $32.00 per square foot to justify six-story construction in five years. Presently, high-end rates for suburban locations are lower, closer to $27.00 to $28.00 per square foot, but each of those developments has received secondary funding assistance. A rate of $28.00 per square foot for the Gravel Pit could also be supported if parking was jointly funded. Parking will be a concern; most developments now are getting parking built through TIF funds
- For construction greater than six-stories (approximately eight to ten stories), rents need to increase beyond $35.00 per sq.ft. (in five years). Cost projections (for construction materials) for beyond ten years are too subjective to suggest what might be necessary for increases above ten stories

- Approximately 8,000-10,000 parking spaces for office use will be necessary if full office build-out is achieved. This results in nearly 15 acres of three-story garages
- A significant amount of office space is coming on the market in the next two years in northern Utah County and central/southern Salt Lake County. Transportation access continues to be key to new firms; consequently, most new development is or will be near I-15 and public transit options
- Achievable rents are anticipated to increase at 3.0 to 5.0 percent per year for the next five years. Construction costs are somewhat volatile, and may match growth rates for rents
- At three percent annual rental rate increases, currently achievable rents (closer to $26.00 per square foot) may not reach levels necessary to support mid-rise development starting in five years; however, if construction costs decline due to weakness in the global economy (but rents remain stable), and parking costs are offset by additional funding sources, construction could be feasible
- Capitalization rates on fully leased, new office buildings could be supported at near 6.0 percent. Rates are presently steady in the Salt Lake Valley, with good interest from a variety of buyer types

Residential Use – Developer/Broker Perceptions & Market Data

- If office and retail construction is met, the Gravel Pit could see a population increase near 7,500. This will result in a need for roughly 3,000 additional residences, based on historical household sizes

- Construction costs are currently too high for for-rent and for-sale development beyond five stories. Significant steel is required beyond that, and current rental rates do not support the increase in costs. Furthermore, in for-sale scenarios, parking spaces via garages are typically required, and costs are somewhat prohibitive at present
- It will likely be five to ten years before more vertical (i.e., higher buildings) construction is supportable for residential use
- A planned mid-rise residential towers development in Sandy is being watched by the market with skepticism
- Five-story apartment buildings could be supported with 15,000 square foot floor plates
- Apartment sizes should average 1,100-1,200 square feet. This results in roughly 60-units per building, and is reflective of the overall market. Condominium sizes could be slightly larger, closer to 1,200 to 1,300 square feet
- Construction could likely be pursued with apartment rental rates near $1,100 to $1,300 per unit per month. This assumes surface parking. Current rental rates for existing supply in Cottonwood Heights are closer to $950 to $1,100 per unit per month. For-sale product will require price points near $150-$175 per square foot in order to support development, particularly with parking garages. Upper level units that have views may be able to achieve these values, while lower floor residences will likely have values near or below the $150 per square foot amount.
- If views are expansive, particularly in later years if higher construction is supportable, achievable apartment rents and price per square foot sales will be moderately higher

- Absorption is forecast by developers and brokers to initially be moderate (for all residential product), but will increase to strong if retail and office construction is concurrent. The market will likely support up to 100 rental units per year of absorption within the Gravel Pit, while for-sale homes could be absorbed at near 50 to 75 units per year (absorption is largely a factor of available supply).
- Residential use could be supported with one building and surface parking per 1.0 to 1.5 acres, including some green space. If 25-30 acres are used for residential, then roughly 1,500 units could be built with the lower height structures. This results in approximately one half of the needed supply if office and retail development is fulfilled
- Higher-density housing construction (beyond five stories) may be supportable in five to ten years, as rental and vacancy rates in Cottonwood Heights are desirable (as are sale prices), as compared to surrounding communities, and upward pressure on rates and achievable values may result with office and retail development in the area
- Financing conditions for for-sale condominium developments (high density) are currently less desirable. If present market conditions continue, developers may be more likely to pursue rental units, as opposed to for sale options
- Capitalization rates for "for rent" residential buildings (new construction) are supportable at near 5.0 to 6.0 percent. Lower rates are highlighted by buildings with Class A locations

Retail - Developer/Broker Perceptions & Market Data

- With increased office and residential use in the immediate area, retail needs could support an additional 250,000 square feet. Market participants, as well

as data points, show that absorption of 25,000 to 50,000 square feet a year could be achieved initially

- Retail should be focused near the frontage of the site on Wasatch Boulevard, with a particular concentration near the intersection of Fort Union and Wasatch Boulevard
- Construction of 250,000 square feet of retail space will require roughly 15 acres. Surface parking will need to be provided at 5.0 spaces per thousand
- If ingress and egress is provided in sufficient numbers (and locations), retail could already be pursued (assuming cessation of existing mining and construction activity), according to market participants. It would be beneficial to have concurrent residential development with retail marketing
- Retail rents need to be from $16-$22 per square foot to financially support new construction (although a big box space could be feasible closer to $12.00 per square foot). This is within the range supported currently by other developments in Cottonwood Heights. As noted above, an anchor tenant may be below this range, while desirable pad sites could be in excess of $22 per square foot
- Retail should be planned to complement what may occur at the neighboring "Dean" property, instead of constructing two, separate sites
- Capitalization rates for retail properties that are newly built and fully leased are showing from 6.5 to 7.5 percent

Lodging/Resort Use

- Site may have appeal for partial lodging/resort type uses. Brokers identify the northeast corner of Fort Union Boulevard and Wasatch Boulevard as having good appeal for a potential hotel/lodging complex

- Brokers and developers believe the immediate area could support up to 300 rooms over the next ten years, depending on the amount of other, commercial activity
- Currently, Cottonwood Heights shows limited hotel use compared to other cities
- Planned development at the Canyon Centre project (located near the intersection of Fort Union Boulevard and Wasatch Boulevard) will result in absorbing nearly half of the anticipated needed lodging supply in the immediate neighborhood, with a proposed plan of nearly145 rooms.

Construction will be completed prior to any construction on the gravel pit (assuming roughly five more years of gravel pit operations)

- Hyatt Place (located just south of I-215, near the Millrock Office Park in Holladay) has healthy demand, similar to most other hotel offerings in neighboring cities. Occupancy rates are reported at near 70 to 75 percent (which is notably higher than the statewide average (62%), but similar to Salt Lake County)

- Demand at Hyatt Place is partially created by the significant amount of nearby office space. Brokers believe that the Gravel Pit's future office development will be key in spurring hotel/resort needs
- Assuming construction of the Canyon Centre development, near-term demand could potentially absorb another 150 units. However, market professionals believe that other activity on the Gravel Pit site would be necessary in order to attract a lodging operator
- Long-term planning depends on activity in the canyons. New resort additions are proposed in both Big and Little Cottonwood Canyons. Reportedly, most out-of-state visitors to the canyons prefer to be within five minutes of the resorts. Consequently, unless traffic measures are improved for the canyons, it is unlikely that a lodge/resort option at the Gravel Pit would have significant appeal to tourists
- A 150-room resort could be situated on roughly four to five acres, with density matching that of the Hyatt Place (which has 124 rooms and parking)
- Financial feasibility is presently supported for hotel construction up to eight stories for desirable urban sites, and six stories for suburban offerings. However, most suburban hotels that are not resort-related (or land-restricted) are being built closer to four stories and from 60 to 120 rooms
- A six-story, 180-room hotel is being considered in South Jordan, with financials currently suggesting that it is feasible, although it requires some funding assistance for parking. The hotel has been planned due to a significant amount of new and planned office space in the immediate area
- Developers and hotel owners see the potential for moderate winter demand for guests who want more affordable options than what is presently offered at the Big and Little Cottonwood Canyon resorts. Average room rates during

the winter season within the canyons are approaching $425 a night. Average rental rates statewide were roughly $98.00 per room, as of 2015

Assumptions for Development (ET+)

Variable	Office	Residential	Retail	Notes
Total Acres for Use Type	**50**	**25 - 30**	**15 - 20**	**Based on likely absorption and developer/broker representations**
Supportable Square Footage	**Up to 2,000,000 sq.ft.**	**Near 3,600,000 sq.ft. (if full buildout)**	**250,000 sq.ft.**	**Residential may support up to 3,000 units, eventually**
Potential FAR	**0.92 (if full build-out)**	**Near 2.75 to 3.3 (if full build-out)**	**0.29 - 0.38 (if full build-out)**	**Shows residential densities upwards of 100 units per acre. To achieve this, high-rise construction will be necessary**
Building Sizes	**100,000 to 300,000**	**Initially near 70,000**	**Range from below**	**Demand may increase in future**

	sq.ft.	**to 75,000 sq.ft.**	**1,000 to excess of 80,000 sq.ft.**	**years to support office construction up to 300,000 sq.ft per building.**
Current Market Rent Per Sq.Ft.	**$26.00 per sq.ft.**	**Near $1.00 to $1.10 per sq.ft.**	**$16-$22 per sq.ft., with large anchors below this range**	**Assumptions based on currently achievable rents for new construction in the area.**
Floor Plate Sizes	**15,000 to 20,000 per sq.ft.**	**15,000 to 18,000 sq.ft.**	**NA**	**Taller buildings should reflect smaller floor plates, resulting in slimmer buildings. Plates beyond the noted ranges could be supported in low-rise construction**
Story Height – Supportable from 2020-2025	**5-6 stories**	**4-5 stories**	**Single-story**	**Achievable rental rates do not justify construction above these heights at present**
Story Height – Future Years (beyond 2025)	**10 stories potentially possible in ten years.**	**8-10 stories. May be demand for high-rise living in future years beyond 10 stories**	**Single-story**	**Costs currently do not allow for higher construction, in relation to achievable rents.**
Average Unit Size	**NA**	**1,100 – 1,300 sq.ft. for rentals 1,200-1,300 for for-sale housing**	**NA**	**Currently slightly above the average unit size in the area; however, larger size is likely necessary to attract the increased rents**
Average Units Per Building	**NA**	**Roughly 60 initially**	**NA**	**High-rise construction could lead to greater densities, although buildings should become slimmer and have fewer units per floor**
Average Square Feet Per Employee	**Near 150 to 200 sq.ft. per employee**	**NA**	**NA**	**Trend in past years is for decreasing space needs per employee**
Necessary Market Rent Per Sq.Ft. for Development	**$28 per sq.ft. - now**	**$1.00 per sq.ft. (rental) Near $150-$175 for high-density for-sale housing**	**$14 per sq.ft, on average, although big box could be supported lower than this**	**Assumes that parking is subsidized at the $28.00 rate. Higher construction will require increased rents closer to $35.00 per sq.ft.**
Likely Capitalization Rates	**7.0 percent**	**5.0 to 6.0 percent**	**7.0 to 7.5 percent**	**All rates highly sensitive to building sizes, specific locations, leased status, etc.**
Required Parking Ratio	**4.0 spaces - minimum**	**1.5 to 2.0 spaces per unit**	**4.5 to 5.0 spaces per thousand**	**Some office users are currently requiring parking at 5.0 per thousand.**
Required Space for Parking – Full buildout	**Nearly 15 acres of three-story garages**	**Upwards of near 4500 spaces, resulting in near 20 acres of surface lots**	**Roughly 1,250 spaces required, or 8-9 acres of parking.**	**Financial feasibility of parking garages is noted herein, as this is a significant issue for properties at present**

Cost Per Parking Space	**Covered - $16,000 per space**	**Covered - $16,000 per space**	**Surface - $4,500 per space**	**Assumes above grade garages for residential and office. Below grade costs would be greater. Costs include consideration for all access points, ramps, etc.**
Hotel/Lodging Construction – up to 5 acres, 150 rooms to be absorbed in next ten years. Financial feasibility is noted for properties up to eight stories for urban locations, and six stories for more suburban sites. Appeal will be primarily for office-related users, and those looking for more affordable winter rates as compared to current lodges in Big and Little Cottonwood Canyons. Most canyon-use hotel demand will be met by existing and new developments presently planned near the resorts.				

Valuation Analysis

Valuation of potential development at the Gravel Pit is now considered. Previous portions of this report considered what may be feasible at the site in terms of absorption, density, building height, required parking, and achievable rental rates, among other assumptions. This section of the analysis looks at what values may result from construction, while a following part of the report details what impacts the development will have for Cottonwood Heights (i.e., fiscal impacts).

Valuation and the study of fiscal impacts will address office, retail, and residential development for the year following the start of site availability (essentially five years from the current period). The amount of space valued, as well as the fiscal impacts, is based on the anticipated first-year absorption. A valuation of the entire, potential buildout is noted to be subjective, considering the anticipated, long-term absorption period. However, a user of this report could feasibly project, if desired, a similar scale of fiscal impacts and values (but with inflation) for future years. This would be speculative, as values and the associated fiscal impacts are tied to changes in market conditions and construction costs. Nonetheless, an estimate can be made for the entire property, based on the more focused data presented below.

Office Valuation

Office development is anticipated for a portion of the Gravel Pit, as previously explained. A total of upwards of 2,000,000 square feet may ultimately be built, with building sizes projected at between 100,000 to 300,000 square feet. Absorption is expected initially at 50,000 to 100,000 square feet per year, with the possibility of accelerated absorption in future years as the site becomes more established. No construction will take place for at least five years, due to existing contracts in place. Consequently, initial construction will not begin for at least five years.

In valuing the office portion of the development, consideration is made for individual buildings, as it is most likely that each property will have a separate, legal parcel. This allows for valuation of an individual building, which is appropriate considering the uncertainty of future development. Consequently, valuation will show a current, hypothetical market estimate for a 100,000 square-foot building. Analysis will also be presented for the likelihood of inflation for future buildings; however, the emphasis of this analysis will be a consideration of value in the current market. Future valuations are notably subjective, and rely upon a myriad of assumptions that may or may not take place based on ownership interests, market conditions, and overall changes in building construction and office use.

Valuation of a 100,000 square foot building utilizes a Direct Capitalization methodology. This valuation technique considers all revenue and expenses anticipated for the year following stabilization of the property (including

completion of construction and full lease-up). The resulting net operating income (NOI), which is estimated by deducting expenses from revenue, is capitalized at an appropriate rate, reflecting a first-year rate of return (often termed as a capitalization rate). Capitalization rates reflect what return investors are willing to receive for a property, and are gleaned from a variety of market sources.

For the Gravel Pit, an approximate 100,000 square foot building was estimated to have achievable, current rents (considering the 2016 time period) at near $26.00 per square foot per year, full service. The full service lease structure requires the landlord to cover nearly all costs of occupancy, with the tenant reimbursing for increases in expenses over a base year amount. The prior analysis also showed that a rate of $28.00 per square foot per year would be necessary for financial feasibility (which considers the future date of construction, and is considered achievable based on current rates and likely, market escalations). Consequently, this analysis applies $28.00 per square foot in estimated market rent, as a lower figure (i.e. $26.00) would most likely not allow for construction.

The associated exhibit shows the application of $28.00 per square foot to 100,000 square feet of rentable area. Gross income is then deducted for a stabilized vacancy rate. Throughout the local market, vacancy is shown at 10.0 percent (as reflected at the end of 2015's fourth quarter, reported by Commerce RE). This reflects a slight decrease from the 10.8 percent indication shown one year prior, and continues a relative downward trend from the previous several quarters.

Gravel Pit, Cottonwood Heights			
Office Construction			
Direct Capitalization - Office			
	Leased Area	Estimated Market Rent (Per Sq.Ft.)	Annual
Office Construction	100000	$28.00	$ 2,800,000
POTENTIAL GROSS INCOME (PGI)			$ 2,800,000
Total Leasable Area	100000		
Stabilized Vacancy Loss (7.5% of PGI)			$ (210,000)
EFFECTIVE GROSS INCOME (EGI)			$ 2,590,000
Operating Expenses			
Taxes, Utilities, Janitorial, Admin, Mng, Etc.			$ (800,000)
Reserves (1% of EGI)			$ (25,900)
Total Operating Expenses			$ (825,900)
NET OPERATING INCOME (NOI)			$ 1,764,100
Capitalization Rate			7.00%
ESTIMATED OFFICE MARKET VALUE - PROPOSED			**$ 25,201,429**
		Per Square Foot:	$ 252.01

Historically, most investors have accounted for a stabilized vacancy rate between 5.0 and 10.0 percent. Considering the current level of office vacancy, but taking into account the improving market and desirability associated with Cottonwood Heights, a midpoint of 7.5 percent is herein applied. Deducting stabilized vacancy from gross income results in Effective Gross Income (EGI).

Expenses associated with operating the building are now estimated. In a full-service lease structure, a landlord is initially responsible for all operating costs. These include property taxes, maintenance and repair, janitorial, utilities, administrative, and management and reserves. Actual expenses from other

office properties were surveyed for this assignment, and data from several national sources was utilized. Buildings that are older and have larger common area appointments are typically less efficient, resulting in higher expenses. Conversely, newer structures with sophisticated building systems reflect lower operating costs. Historically, most office buildings in suburban environments have operated between $6.00 and $11.00 per square foot per year. Considering that the subject property will be a new development, and that construction may utilize some green measures or cost-saving energy programs, expenses are estimated at the low-to-midpoint of this range, or $8.00 per square foot per year. Deducting total expenses from EGI results in Net Operating Income (NOI).

Net Operating Income is then capitalized by an appropriate rate, as described previously. Properties with new construction, desirable locations, and good tenancy characteristics typically reflect lower overall rates (due to increased demand). Conversely, higher capitalization rates are associated with buildings that have near-term vacancy exposure, secondary locations, older ages, and looming capital expenditures.

Capitalization rates are shown from a variety of sources, including recent sales comparables, brokers, developers, and real estate surveys. The following table highlights a range for office capitalization rates for properties in the area.

Capitalization Rates - Office		
Source	Cap Rate Range	Average
Brokers	5.5%-7.5%	6.50%
Developers	6.0-8.5%	7.00%
Published Surveys	6.5%-8.0%	7.25%
Commerce Real Estate Solutions Survey (2015)		7.70%
Commerce Real Estate Solutions Survey (2014)		6.34%

The sources above show a range from roughly 5.5 to 8.0 percent, with a concentration from nearly 6.5 to 7.5 percent. The lowest end is likely reflective of Class A, downtown sites that have significant appeal. The upper end is representative of older buildings in secondary locations. The subject's site is noted to be desirable, particularly if additional development transpires at the site and if transportation means along Wasatch Boulevard are improved. The latter, as detailed by market participants, includes ready access to the property from multiple points, traffic measures that allow for left-hand turns into the property, potential for mass transit options, and landscape/hardscape improvements along the right-of-way.

Also considered in the capitalization rate analysis is that the proposed office buildings will be new, and are assumed to be of good quality and condition buildouts. Noting the current demand in the office market, and the anticipated need for future office space, as well as the above factors, an overall rate of 7.0 percent is considered appropriate herein. This rate was furthermore confirmed as feasible from several developers who are active in the local area.

Applying a 7.0 percent overall rate to the net operating income from a hypothetical 100,000 square foot office building results in a rounded value indication of $25,200,000, or near $250 per square foot. Again, this represents construction in a few years when rent of $28.00 per square foot is a feasible amount, and when the site is available for construction.

Overall, it is anticipated that the Gravel Pit could support upwards of 2.0 million square feet of office space. Future values will be dependent upon a variety of factors, including changes in market conditions, construction costs, and specific locations within the overall site (those with better views or access points will likely represent higher values). Consequently, a current valuation of future construction is deemed to be overly subjective, and likely not beneficial to future planning efforts. Nonetheless, if market conditions stay consistent, as well as construction costs, it could be relatively assumed that the $250 per square foot price estimate could be inflated by an average of two to three percent per year. Both income and expenses will likely rise, and capitalization rates should ultimately stay in a range that offers buyers an alternative from other investment sources. As a result, future development could be anticipated to occur at values that reflect the hypothetical scenario above, as adjusted for inflation. Overall, this analysis concludes that a single office building, if constructed when the site is available (roughly five years), will have a value at near $250 per square foot.

Retail Valuation

Similar to the valuation presented for the projected office space, consideration is now given for the potential retail development. Overall, the Gravel Pit is

assumed to be supportive of an eventual 250,000 square feet. Absorption is estimated at 25,000 square feet per year, with building sizes likely being reflective of a wide range of in-line suites, junior anchors, anchors, and pad sites. Consequently, a range in retail buildings will probably result in sizes from near 1,000 to upwards of 80,000 square feet. For this analysis, a building of 25,000 square feet is utilized for valuation purposes.

Gravel Pit, Cottonwood Heights			
Retail Construction			
Direct Capitalization - Retail			
	Leased Area	Estimated Market Rent (Per Sq.Ft.)	Annual
Retail	25000	$18.00	$ 450,000
POTENTIAL GROSS INCOME (PGI)			$ 450,000
Total Leasable Area	25000		
Vacancy Loss (5.0% of PGI)			$ (22,500)
EFFECTIVE GROSS INCOME (EGI)			$ 427,500
Operating Expenses			
Management (3% of EGI)			$ (12,825)
Reserves (1% of EGI)			$ (4,275)
Total Operating Expenses			$ (17,100)
NET OPERATING INCOME (NOI)			$ 410,400
Capitalization Rate			7.25%
ESTIMATED RETAIL MARKET VALUE - PROPOSED			**$ 5,660,690**
		Per Square Foot:	$ 226.43

Retail rents, as previously described, are likely for the subject property from $16.00 to $22.00 per square foot, triple net (while larger anchors would likely be below this range). The triple net lease structure results in the tenant

covering nearly all costs of occupancy, except for management and reserves. This is common for retail properties. The range in rental rates is reflective of the variety of retail suite sizes, with larger units reflecting lower rents per square foot, all else equal. In a hypothetical building of 25,000 square feet, it is likely that a variety of suite sizes could be reflected. Consequently, an estimated market rent of $18.00 per square foot is considered appropriate for this analysis, and is applied to building square footage to result in gross income.

Stabilized vacancy is also deducted from gross income, similar to the office analysis. For retail properties, Commerce RE shows a retail vacancy rate, as of 2015's fourth quarter end, at 5.8 percent. This is relatively similar to previous quarters, and is reflective of a healthy market that often ranges from 4.0 to 6.0 percent. Considering the practices of most retail investors, a 5.0 percent stabilized vacancy rate is applied to gross income, resulting in EGI.

Expenses for retail tenants, in a triple net scenario, are covered by the occupants. Only management and reserves are paid by the tenant, and are shown on the exhibit at 3.0 and 1.0 percent, respectively. Expenses are deducted from effective gross income, with NOI shown on the exhibit.

Retail capitalization rates are shown in the table below. Historically, offices have supported lower capitalization rates than retail, all else equal. In the subject's analysis, it is noted that the hypothetical retail building is notably smaller than the proposed office, which argues for a lower overall rate. However, developer perceptions and the trend in retail capitalization rates suggest that a rate between 7.0 and 7.5 percent would be appropriate. A

midpoint of 7.25 percent is selected, and is applied to net operating income. A value of a rounded $5.66 million results, or roughly $225 per square foot.

Similar to the office analysis, the $225 per square foot indication shows a hypothetical value for construction of a retail building when the site is buildable. Valuation of the remainder of the retail space could be anticipated to follow historical inflation levels, assuming that no significant changes occur in the planned build-out of the site, or market conditions do not deteriorate for retail product. Higher values could be anticipated if residential and office are absorbed at a quicker pace than forecast, and if building positions along the site allow for readily accessible ingress/egress, and desirable visibility and exposure characteristics.

Residential Valuation

Consideration is now made for the subject's potential residential component. As explained previously, the Gravel Pit is forecast to absorb roughly 3.6 million square feet of residential living area. This will likely include a combination of rental and "for sale" inventory, with building heights initially intended for four to five stories, and floor plates at near 15,000 to 18,000 square feet. Consequently, a single building will likely initially be near 75,000 square feet, with average unit sizes of roughly 1,200 square feet (resulting in nearly 62 units per building).

Comparable apartment rents in Cottonwood Heights and surrounding communities show achievable rates at roughly $1.00 to $1.10 per square foot per month. With a midpoint of $1.05, this equates to near $1,260 in monthly

rent. While view units and those with desirable locations may achieve higher rental rates, an average is most likely supportable near $1,260 per month.

Gravel Pit, Cottonwood Heights			
Residential Construction			
Direct Capitalization - Apartments			
	Total Units	**Estimated Market Rent/Per Mo.**	**Total**
Estimated Revenue	62	$1,260	$937,440
Additional Income (storage, parking, late fees, etc.)		$50.00	$37,200
POTENTIAL GROSS INCOME (PGI)			**$974,640**
	Total Liveable Sq.Ft.	*74400*	
Vacancy and Collection Loss (5% of PGI)	*Per Unit*	*1200*	**($48,732)**
EFFECTIVE GROSS INCOME (EGI)			**$925,908**
Estimated Operating Expenses			
	Management (5% of EGI)	($46,295)	
	Reserves (1% of EGI)	($9,259)	
	Property Taxes	($75,075)	
	Insurance	($37,200)	
	Maintenance & Repair	($74,400)	
	Utilities	($74,400)	
	Other/Legal/Accounting	($18,600)	
Total Operating Expenses		($335,229)	**($335,229)**
NET OPERATING INCOME (NOI)			**$590,679**
		Capitalization Rate	5.5%
		Estimated Market Value	$10,739,609
		Per Unit	$173,220
		Per Sq.Ft.	$144.35

Additional income is also anticipated for apartment rentals from late fees, limited utility reimbursements, storage fees, etc. Historically, these costs sum to near $40.00 to $60.00 per unit per month. A midpoint is utilized herein, with the resulting potential gross income shown on the exhibit.

Stabilized vacancy is deducted from gross income, at 5.0 percent. Apartment vacancy rates have historically been near this level, and current survey sources suggest vacancy rates near 4.0 to 5.0 percent. The local leasing market is

considered to be healthy at present, and some market concerns about saturation are generally alleviated by beneficial demographic trends.

Expenses are estimated by studying competitive apartment developments, as well as survey sources. Landlords are responsible for property taxes, insurance, maintenance and repair, common area utilities (and typically water for all units), administrative support, and management costs. For new construction, apartment expenses can vary from near $4,000 to $7,000 per unit per year, dependent upon the level of amenities and common area. A breakdown of the various expense categories is shown on the associated exhibit.

Finally, net operating income is capitalized by an appropriate rate. The table below highlights apartment capitalization rates, with a relative range from near 5.0 to 6.5 percent.

Capitalization Rates - Apartments		
Source	Cap Rate Range	Average
Brokers	5.0%-6.0%	5.50%
Developers	5.25%-6.5%	5.75%
Published Surveys	5.0%-6.45%	5.75%
Commerce Real Estate Solutions Survey (2015)		5.58%
Commerce Real Estate Solutions Survey (2014)		6.28%

Considering the desirable Cottonwood Heights' address, as well as consideration for new construction, a rate of 5.5 percent appears supportable for apartment construction. Overall, a value indication results at a rounded $10,700,000, or nearly $170,000 to $175,000 per unit.

A total valuation for the entire residential development is likely not appropriate, considering the subjectivity of future absorption and likely changes in costs and market conditions. Nonetheless, the $170,000 to $175,000 per unit range provides a base standard for a four to five-story apartment building that could be constructed as soon as the site is available. Furthermore, a comprehensive future valuation is likely not appropriate due to the potential for both "for sale" and "for rental" housing. The construction and absorption of either type will be predicated on market conditions at that time. The relative flexibility to have either type, with both being in demand at present in Cottonwood Heights, will provide a degree of developmental flexibility. If financing for apartments tightens, then more "for sale" housing could be built, and vice-versa.

In the "for sale" market, previous studies indicated that valuations were necessary to support development at $150 to $175 per square foot. Currently, desirable units in Cottonwood Heights, as well as surrounding markets, have price points within or above this range. Units with inferior views and less appealing locations are closer to the $150 per square foot indication, or even slightly below. Overall, considering the potentially desirable location, and the possibility of future views and nearby retail, price points above the $175 per square foot amount, for "for sale" product, are likely.

Fiscal Impacts

Fiscal impacts are now considered for potential gravel pit construction. The following sections separately address office, retail, and residential product.

Office – Fiscal Impacts

As outlined previously, valuation of the entire office potential was not undertaken; rather, an estimate of value was given for a building most likely to be constructed in the first year of site availability. Consequently, fiscal impacts can be estimated for a similar construction scenario, with future forecasting based on trends that develop over time.

The office valuation showed a potential per square foot indication of $250, based on new construction and mid-rise design. According to the Utah State Tax Division, the "county assessor appraises commercial property at 100% of its "fair market value," which is theoretically the value at which the property would sell for on the open real estate market. In the process the assessor is aiming at uniform valuations, meaning that similar properties should have similar values. The standards of fair market value and uniform valuations are requirements of the Utah Constitution." Furthermore, per this same source, "commercial property is assessed and taxed at 100% of fair market value."

Considering the above definition for market and taxable values, the question arises as to how market value will be determined for the subject's office (and other) space. The previous valuation analyses utilized one approach of valuation, the Income Approach (utilizing Direct Capitalization methodologies). In practice, there are three approaches to estimating value: the Cost Approach, Income Approach, and Sales Comparison Approach. Due to the

subject's future status, and the lack of developments that have similar locational and building characteristics, a Sales Comparison Approach is likely not appropriate. Nonetheless, recent sales comparables were surveyed to provide a check for the results from the Income Approaches. In each use-type scenario (office, retail, and residential), recent sales were supportive of the estimated conclusions. A Cost Approach was not relied upon in the separate analyses, as this valuation technique uses detailed information about building and land costs. Theoretically, all costs, plus land value, as well as an appropriate profit return to a developer, should sum to a value that is near the conclusions from the Sales Comparison and Income Approaches. If the Cost Approach is notably higher, then financial feasibility is questionable. In the subject's analysis, cost figures were studied to gain insight into what rents will be required in order to make development feasible. Consequently, a form of a Cost Approach was used in determining financial feasibility. It was not focused upon, however, in the individual valuations, due to the subjectivity of projecting future cost figures, as well as the unknown features regarding the subject's soils and potential fault issues.

Overall, as Sales Comparison and Income Approaches conclude at similar levels for the subject's proposed, multiple uses, and as costs were considered in order to determine levels of financial feasibility, it is likely that the Assessor would conclude with the previous results. Consequently, taxable value can be ascertained from the prior conclusions. The current tax rate for the area is 0.017313, which would be applied to the total building value. The property tax rate for Cottonwood Heights is 0.002239.

Despite the above explanation, most taxable values in Utah appear to be using figures that are below market values for commercial properties. The associated table and map show taxable values for the nearby Cottonwood Corporate Center and Millrock Park. Both office developments are considered to be some of the best office space in the valley, and, consequently receive some of the highest rental rates on a per square foot basis. While some of the market values are noted to be in excess of $200 a square foot, others are well below. In fact, market value estimates are at levels which are well below replacement cost, suggesting that those buildings could not be reconstructed today and have any value.

Valuations for the Gravel Pit's proposed offices should be higher than what is reflected on the noted table, as the Gravel Pit assumes a future construction date, and the comparable office parks are a bit older in original construction. Nonetheless, the gap is still significant. One explanation may be that the lack of recent sales activity in the neighborhood has resulted in a limited number of updated assessments. The recent sale of Property 13 (as shown on the map) should in theory result in escalated assessments in the neighborhood. Its market value, as reflected on the table and recorded by the Assessor, is shown at $156 per square foot, while its sale price was closer to $175 a square foot. However, the Assessor indicates that the property has been reassessed, and that no further adjustments are imminent, despite the market value transaction at a higher value between a willing buyer and seller. As a result, it appears that lower taxable values are being used for commercial properties, as opposed to true market values.

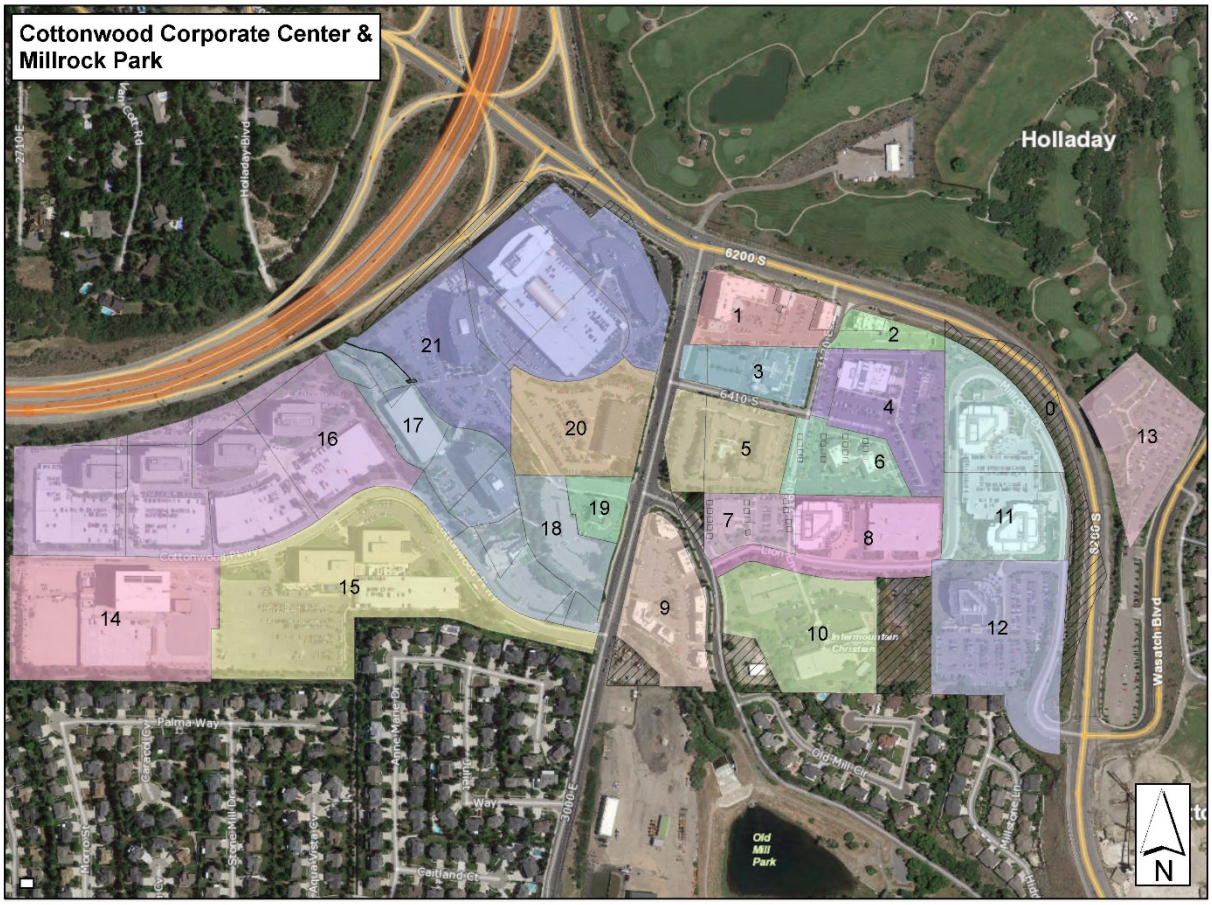
Cottonwood Corporate Center &
Millrock Park
Holladay
6200 S
6410 S
6300 S
Wasatch Blvd
Old Mill Park
N
0
1
2
3
4
5
6
7
8
9
10
11
12
13
14
15
16
17
18
19
20
21

							Building Value		Market Value	
Group	Number of Parcels	Total Building Square Feet	Total Acres	Total Land Value	Total Building Value	otal Market Valu	Per Sq Ft	Per Acre	Per Sq Ft	Per Acre
0	9	576	9.26	$1,948,100	$500	$1,948,600	$0.87	$54	$3,382.99	$210,432
1	3	93,042	2.83	$1,820,000	$11,519,400	$13,339,400	$123.81	$4,070,459	$143.37	$4,713,569
2	2	6,893	1.08	$611,600	$1,150,600	$1,762,200	$166.92	$1,065,370	$255.65	$1,631,667
3	2	36,634	2.59	$1,642,100	$3,020,300	$4,662,400	$82.45	$1,166,139	$127.27	$1,800,154
4	1	60,504	4.25	$2,406,700	$7,505,100	$9,911,800	$124.04	$1,765,906	$163.82	$2,332,188
5	2	99,925	3.86	$2,343,300	$9,981,900	$12,325,200	$99.89	$2,585,984	$123.34	$3,193,057
6	16	104,688	2.71	$2,922,100	$9,870,000	$12,792,100	$94.28	$3,642,066	$122.19	$4,720,332
7	14	73,200	1.95	$2,070,500	$8,185,700	$10,256,200	$111.83	$4,197,795	$140.11	$5,259,590
8	1	248,328	4.4	$2,491,000	$29,822,400	$32,313,400	$120.09	$6,777,818	$130.12	$7,343,955
9	1	40,595	3.87	$2,191,600	$4,816,800	$7,008,400	$118.66	$1,244,651	$172.64	$1,810,956
10	1	34,963	5.74	$2,275,300	$2,000,000	$4,275,300	$57.20	$348,432	$122.28	$744,826
11	2	563,260	7.63	$4,320,700	$59,581,300	$63,902,000	$105.78	$7,808,820	$113.45	$8,375,098
12	1	82,855	7.4	$4,190,500	$12,995,300	$17,185,800	$156.84	$1,756,122	$207.42	$2,322,405
13	1	80,428	4.09	$2,316,100	$10,258,400	$12,574,500	$127.55	$2,508,166	$156.34	$3,074,450
14	1	313,096	8.84	$5,005,900	$23,900,600	$28,906,500	$76.34	$2,703,688	$92.32	$3,269,966
15	1	351,417	13.13	$5,204,700	$38,459,000	$43,663,700	$109.44	$2,929,094	$124.25	$3,325,491
16	10	731,476	17.46	$9,460,100	$106,909,700	$116,369,800	$146.16	$6,123,121	$159.09	$6,664,937
17	7	328,094	5	$2,594,600	$28,684,000	$31,278,600	$87.43	$5,736,800	$95.33	$6,255,720
18	4	27,774	4.27	$2,290,600	$2,184,800	$4,475,400	$78.66	$511,663	$161.14	$1,048,103
19	1	7,636	1.16	$676,900	$644,500	$1,321,400	$84.40	$555,603	$173.05	$1,139,138
20	1	72,524	5.14	$2,910,700	$7,402,300	$10,313,000	$102.07	$1,440,136	$142.20	$2,006,420
21	5	923,024	13.38	$7,050,200	$110,303,500	$117,353,700	$119.50	$8,243,909	$127.14	$8,770,830
Grand Total	**86**	**4,280,932**	**130.04**	**$68,743,300**	**$489,196,100**	**$557,939,400**	**$114.27**	**$3,761,889**	**$130.33**	**$4,290,521**

For the subject property, the tables above suggest that fiscal impacts be calculated from values that are below estimated market value. A $250 per square foot indication may, per precedence, be taxed closer to $200 per square foot. The near 20 percent difference seems supportable when viewed in comparison to properties in the subject's neighborhood. While the methodology behind the Assessor's practices is seemingly contradictive, a more conservative approach in estimating fiscal impacts is likely appropriate. Consequently, a $200 per square foot estimate to a 100,000 square foot office building results in a value of $20,000,000. As applied to a tax rate of 0.017313, property taxes are shown at a rounded $350,000. Property tax impacts to Cottonwood Heights, based on real property only, are approximately $44,780. In addition, personal property associated with the office space (i.e., computers, copiers, printers, equipment, etc.) would be taxed at the same tax rates.

In addition, office development will generate municipal energy franchise fees, which the City has enacted to the full six percent. Based on average costs of $1.34 per square foot per year for electricity and $0.18 per square foot for gas,[1] average energy costs in a 200,000 square foot building will reach approximately $300,000 per year. Six percent of this amount, or just over $18,000 will flow to the City annually.

Retail – Fiscal Impacts

Similar to the analysis for the office space, conservatism is considered necessary for estimating retail fiscal impacts. The prior valuation section showed a potential market value of $225 per square foot. Following the logic utilized in the office study, a deduction of 20 percent is herein applied. This results in a total of near $180 per square foot. At 25,000 square feet (the retail construction and absorption for the year when the site becomes available), an assessed value may be supported at $4,500,000. Total property taxes are therefore estimated at a rounded $80,000. Property taxes paid to Cottonwood Heights are estimated at nearly $10,100 annually.

Fiscal impacts are also considered from retail sales taxes. Sales volumes can be estimated by looking at competitive properties and their typical sales per square foot figures. At 25,000 square feet, a retail building will likely have a number of in-line suites, a junior anchor, and possible pad or restaurant type users. Tenants will likely include a variety of both national and local types, and services and goods offered will be varied. Nonetheless, it is assumed that the

[1] https://www9.nationalgridus.com/non_html/shared_energyeff_office.pdf

retail buildout will be similar to other, suburban developments that are located on well-trafficked corridors. The subject's retail may eventually flourish, as compared to other sites, due to the potential of significant office and residential construction in the immediate area.

Overall, with a combination of in-line suites, pad parcels, and potential junior anchors, sales per square foot will likely range from $250 to $300. At a total of 25,000 square feet, total sales should range between $6.25 million and $7.5 million annually. Of total sales, one-half of one percent is returned to the local communities based on to the local cities based on point of sale or, in this case, between $31,250 and $37,500 annually.

Retail development will also generate municipal energy tax revenues. On average, retail buildings use $1.21 of electricity and $0.14 of gas per square foot annually.[2] Therefore, a 25,000 square foot building would generate just over $2,000 annually in municipal energy taxes for the City.

Residential – Fiscal Impacts

Finally, fiscal impacts are considered for the subject's residential component. All primary residential properties are taxed at 55 percent of their market value. With an average residential market value of $175,000 per unit, the taxable value would be $96,250. Using Cottonwood Heights' tax rate of 0.002239, the resulting annual taxes paid to the City would amount to roughly $215 per year. Secondary residences are taxed at their full market value, the same as commercial properties.

[2] https://www9.nationalgridus.com/non_html/shared_energyeff_retail.pdf

The City would also receive sales tax revenues from residential development. This is because local option sales taxes are distributed based on both point of sale and population. Recently, Utah has been averaging a distribution of about $85 per capita.

Just like commercial properties, residential properties pay municipal energy taxes. Based on research recently conducted for Salt Lake County, the average electric and gas bill per residential unit is $272 per month, or approximately $3,264 per year, thus generating nearly $200 per unit per year in franchise fees.

Finally, road funds in Utah are also partially distributed based on population. Although this amount varies from year to year, an approximate amount would be $23 per capita per year.

EXHIBIT B: CONCEPTUAL SITE LAYOUTS

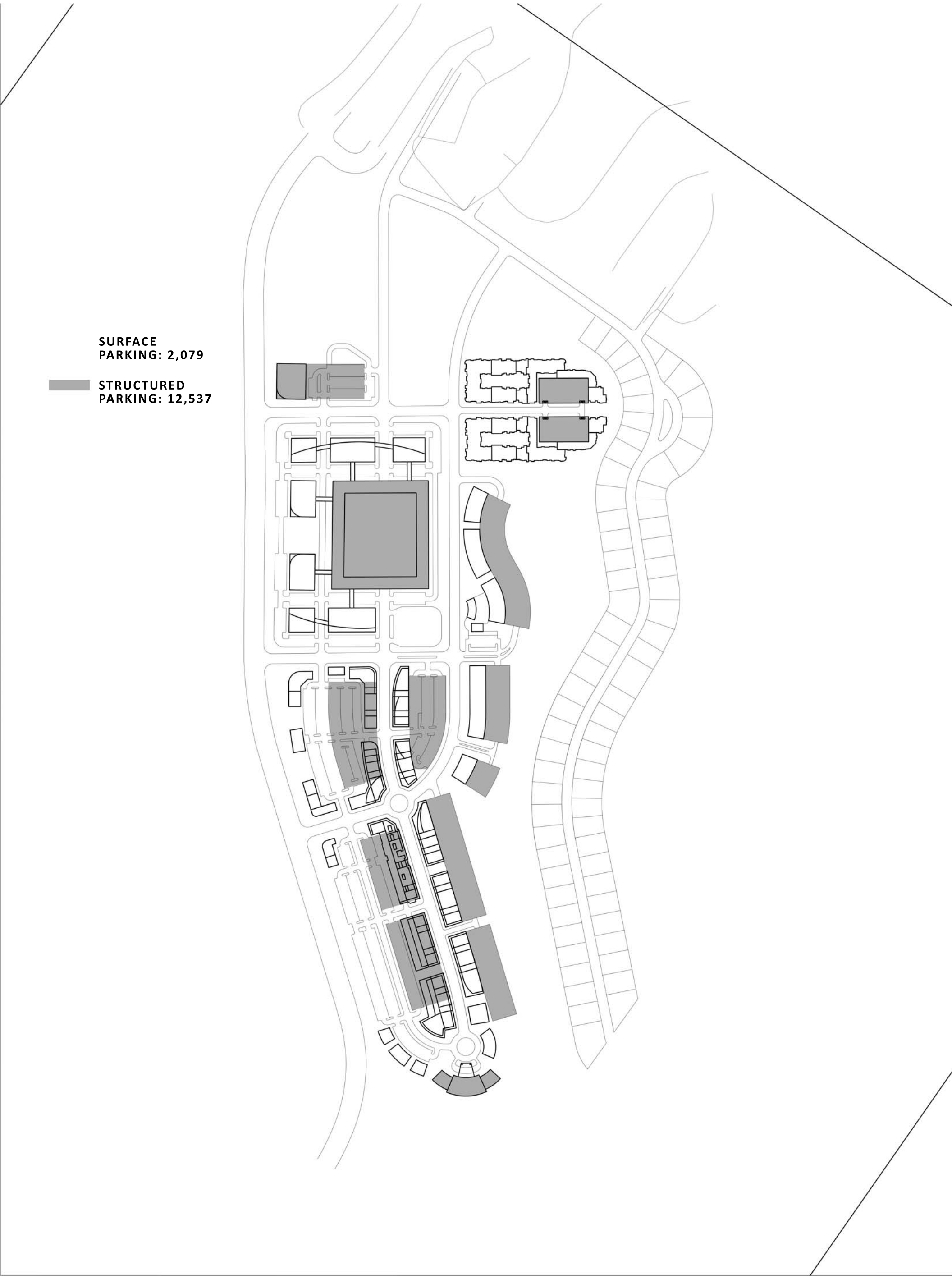

blū

blū line designs
8719 S. Sandy Parkway
Sandy, UT 84070
p 801.913.7994

the terrace

0 100 200 400 600

n

blū

blū line designs
8719 S. Sandy Parkway
Sandy, UT 84070
p 801.913.7994

the terrace

0 100 200 400 600

n

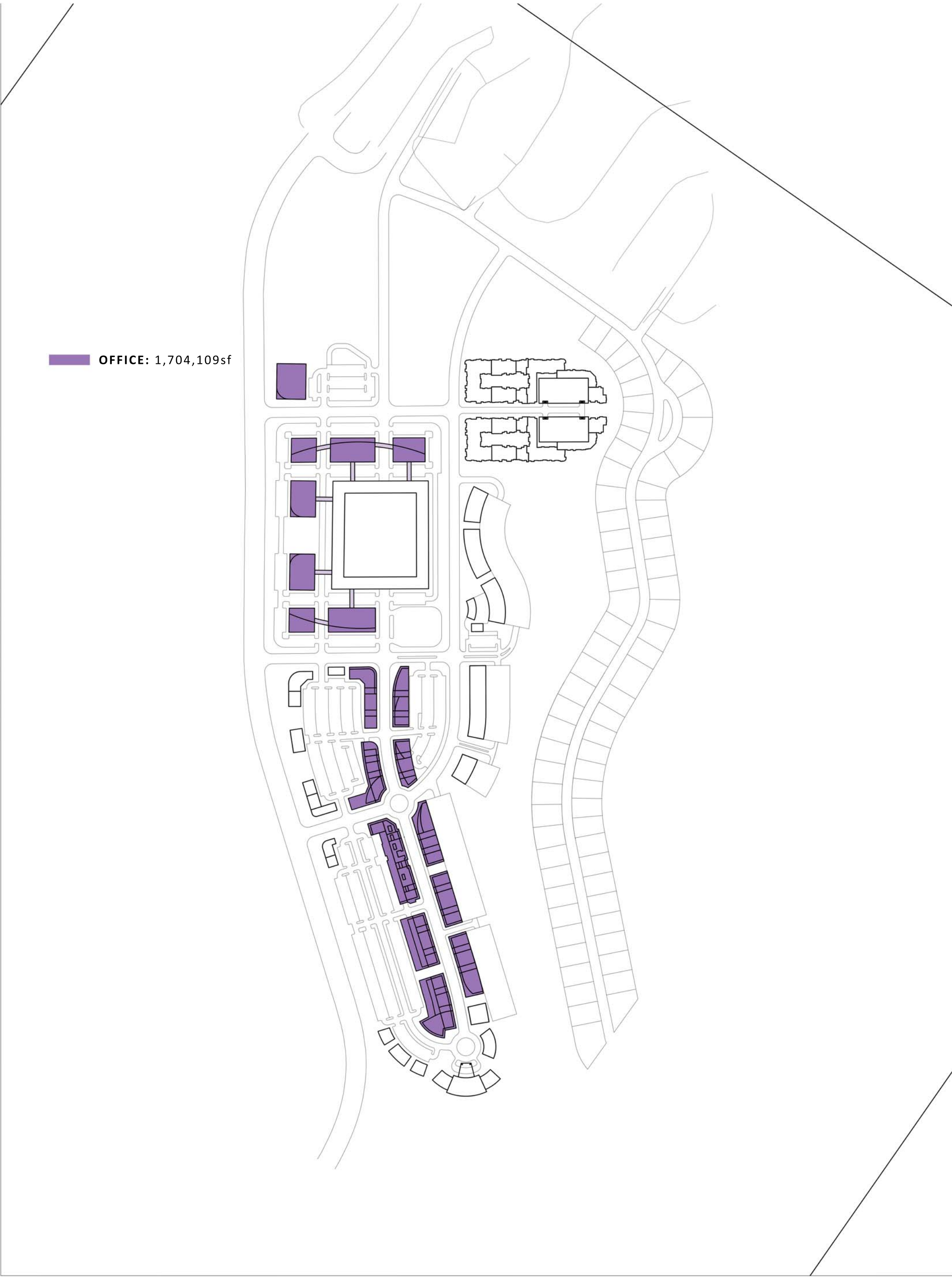

blū

the terrace

0 100 200 400 600

n

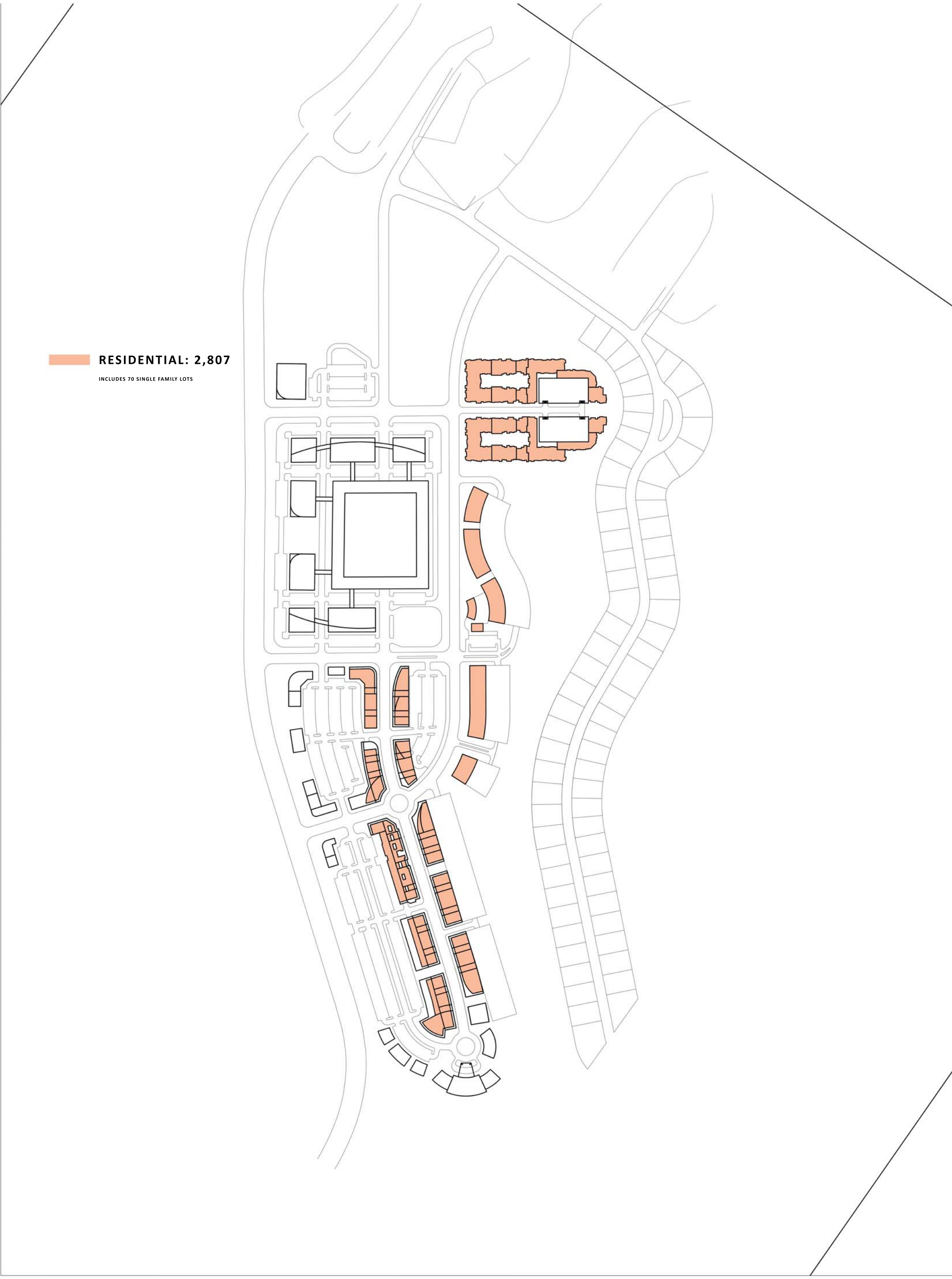

blū

the terrace

0 100 200 400 600

n

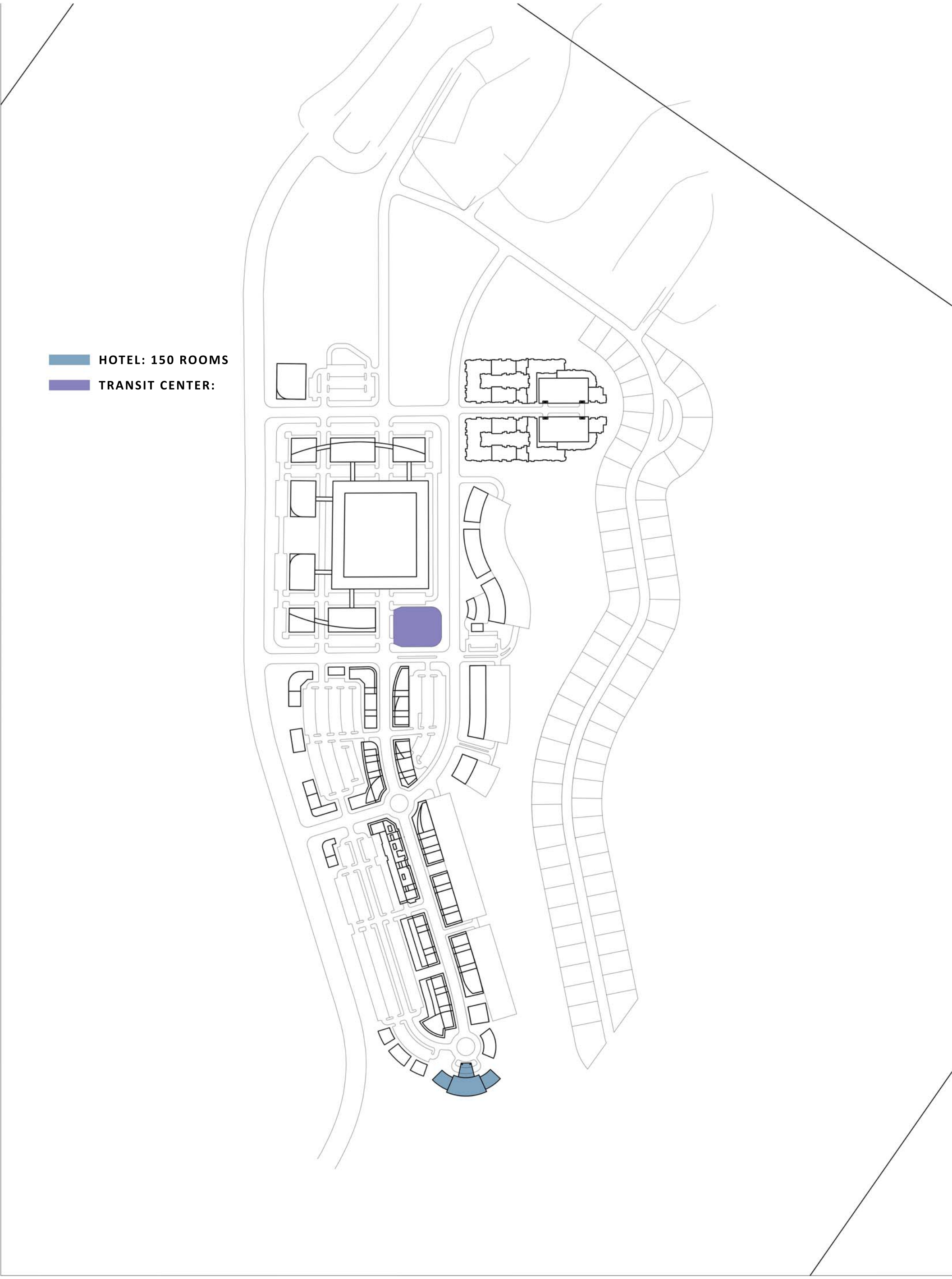

blū

the terrace

0 100 200 400 600

EXHIBIT C: GRAVEL PIT TRAFFIC IMPACT ANALYSIS

FEHR PEERS

MEMORANDUM

Date: June 30, 2016

To: Glen Goins, Cottonwood Heights City

From: Fehr & Peers

Subject: Wasatch Boulevard Transportation Analysis Memorandum

UT15-1089

EXECUTIVE SUMMARY

Fehr and Peers performed a traffic analysis to model and simulate existing and future traffic conditions along the Wasatch Boulevard corridor. The purpose of this memorandum is to provide a summary of the findings of the existing and future conditions between the I-215/6200 South interchange and Fort Union Boulevard in Cottonwood Heights City. Future conditions were based on assumptions from a 2016 market study for the gravel pit site conducted by Zions Bank Public Finance, in support of the Wasatch Boulevard Corridor Master Plan.

Traffic counts at the study intersections were collected to establish a baseline of existing and future conditions and operations for the area. Using SimTraffic microsimulation software and the HCM 2010 delay thresholds the existing and future AM and PM peak hour LOS were computed for each study intersection. Projected 2040 volumes were obtained using linear growth rates based on the Wasatch Front Regional Council's travel demand model. The MXD+ tool was used for trip generation.

For the existing (2015) most of the study intersections operate at LOS D or better for the existing conditions during the AM peak hour, except for the I-215 / 6200 South interchange, which operates at a LOS E. For the future 2040 background conditions most of the study intersections operate at LOS D or better for the 2040 background conditions during the AM peak hour, except for the I-215 / 6200 South interchange, which operates at a LOS E due to heavy left turn movements in the northbound direction.

For the future (2040) plus project conditions most of the intersections operate at a LOS C or worse during the AM peak hour. During the PM peak hour most of the study intersections operate at a LOS F. 3000 East / 6200 South is the only intersection that does not operate at LOS F during the PM peak hour. I-215 / 6200 South and Access 4 both operate at LOS F during both AM and PM peak hours.

This analysis includes figures for each intersection with their respective traffic volumes and LOS. Complete LOS summary reports for all scenarios are also found in this memorandum.

INTRODUCTION

This memorandum summarizes existing traffic conditions and planned transportation projects for Wasatch Boulevard between the I-215/6200 South interchange, and Fort Union Boulevard in Cottonwood Heights City. An analysis of future traffic conditions, based on projected development assumptions, is also provided. The purpose of these analyses is to identify transportation issues and needs associated with future potential development at the gravel pit site on the east side of Wasatch Boulevard, north of Big Cottonwood Canyon in Cottonwood Heights, Utah. See **Figure 1** for a project location map.

The analysis presented within this document is based on traditional traffic engineering principles. Upon completion of the existing conditions model, the future 2040 background and future 2040 plus project models were then analyzed for the AM and the PM peak hours. Volumes for the 2040 scenarios were forecasted using growth rates obtained from the Wasatch Front Regional Council's (WFRC) travel demand model.

STUDY AREA

This study analyzes the traffic operations at the following study intersections:

- I-215 / 6200 South
- 3000 East / 6200 South
- 6200 South-Wasatch Blvd / Millrock Dr
- Wasatch Blvd / Fort Union Blvd-Big Cottonwood Canyon Rd
- Wasatch Blvd / Bengal Blvd-Honeywood Cove Dr

DATA COLLECTION

Traffic counts at the study intersections were collected to establish a baseline of existing conditions and operations for the area. At the study intersections, traffic counts were recorded from 7:00 AM to 9:00 AM and from 4:00 PM to 6:00 PM on Thursday, October 22, 2015 to capture vehicular activity for the AM and PM peak periods. Detailed traffic counts at each intersection are presented in the Appendix.

N

Not to Scale

FEHR & PEERS

STUDY AREA

FIGURE 1

ANALYSIS METHODOLOGY

Level of Service (LOS) is a term that describes the operating performance of an intersection or roadway. LOS is measured quantitatively and reported on a scale from A to F, with A representing the best performance and F the worst. **Table 1** provides a brief description of each LOS letter designation and an accompanying average delay per vehicle for unsignalized intersections. The Highway Capacity Manual 2010 (HCM 2010) methodology was used in this study to remain consistent with "state-of-the-practice" professional standards.

TABLE 1 LEVEL OF SERVICE DESCRIPTIONS

LOS	Description	Signalized Intersections	Unsignalized Intersections
		Avg. Delay (sec/veh)[1]	Avg. Delay (sec/veh)[2]
A	*Free Flow / Insignificant Delay* Extremely favorable progression. Individual users are virtually unaffected by others in the traffic stream.	< 10.0	< 10.0
B	*Stable Operations / Minimum Delays* Good progression. The presence of other users in the traffic stream becomes noticeable.	> 10.0 to 20.0	> 10.0 to 15.0
C	*Stable Operations / Acceptable Delays* Fair progression. The operation of individual users is affected by interactions with others in the traffic stream	> 20.0 to 35.0	> 15.0 to 25.0
D	*Approaching Unstable Flows / Tolerable Delays* Marginal progression. Operating conditions are noticeably more constrained.	> 35.0 to 55.0	> 25.0 to 35.0
E	*Unstable Operations / Significant Delays Can Occur* Poor progression. Operating conditions are at or near capacity.	> 55.0 to 80.0	> 35.0 to 50.0
F	*Forced, Unpredictable Flows / Excessive Delays* Unacceptable progression with forced or breakdown of operating conditions.	> 80.0	> 50.0

1. Overall intersection LOS and average delay (seconds/vehicle) for all approaches.
2. Worst approach LOS and delay (seconds/vehicle) only.
3. Volume to capacity (v/c) rate, average values.

Source: Fehr & Peers descriptions, based on *2010 Highway Capacity Manual*.

EXISTING 2015 CONDITIONS

PURPOSE

The purpose of the 2015 existing conditions analysis is to study the intersections during the peak travel periods of the day under existing traffic and geometric conditions. Through this analysis, existing traffic operational deficiencies can be identified.

LEVEL OF SERVICE ANALYSIS

Using SimTraffic microsimulation software and the HCM 2010 delay thresholds introduced above, the existing AM and PM peak hour LOS were computed for each study intersection (see appendix for detailed LOS reports). The results of this analysis are reported in **Figure 2** and **Table 2**.

TABLE 2 EXISTING 2015 BACKGROUND CONDITIONS PEAK HOUR LEVEL OF SERVICE

Intersection				Worst Movement[1]			Overall Intersection	
ID	Location	Period	Control	Movement[3]	Delay (sec/veh)	LOS	Avg. Delay (sec/veh)[2]	LOS
1	I-215 / 6200 South	AM	Signal	-	-	-	63.9	E
		PM		-	-	-	61.9	E
2	3000 East / 6200 South	AM	Signal	-	-	-	25.5	C
		PM		-	-	-	101.7	F
3	6200 South-Wasatch Blvd / Millrock Dr	AM	Signal	-	-	-	15.1	B
		PM		-	-	-	22.7	C
4	Wasatch Blvd / Fort Union Blvd	AM	Signal	-	-	-	13.1	B
		PM		-	-	-	35.3	D
5	Wasatch Blvd / Bengal Blvd	AM	Signal	-	-	-	51.1	D
		PM		-	-	-	61.1	E

1. This represents the worst movement LOS and delay (seconds/vehicle) and is only reported for unsignalized intersections.
2. This represents the overall intersection LOS and delay (seconds/vehicle).
3. NB=Northbound, SB=Southbound, EB=Eastbound, WB=Westbound, LT=Left-turn, RT=Right-turn, and TH=Through
Source: Fehr & Peers.

As shown in **Table 2**, most of the study intersections operate at LOS D or better for the existing conditions during the AM peak hour, except for the I-215 / 6200 South interchange, which operates at a LOS E. The heavy volume for the left turn movements in the east and west approach considerably increase the delay for the intersection.

In the PM peak hour, all intersections operate at a worse LOS because of the heavy volume along Wasatch Boulevard. In addition, 3000 East / 6200 South presents heavy left turn movements in the northbound direction.

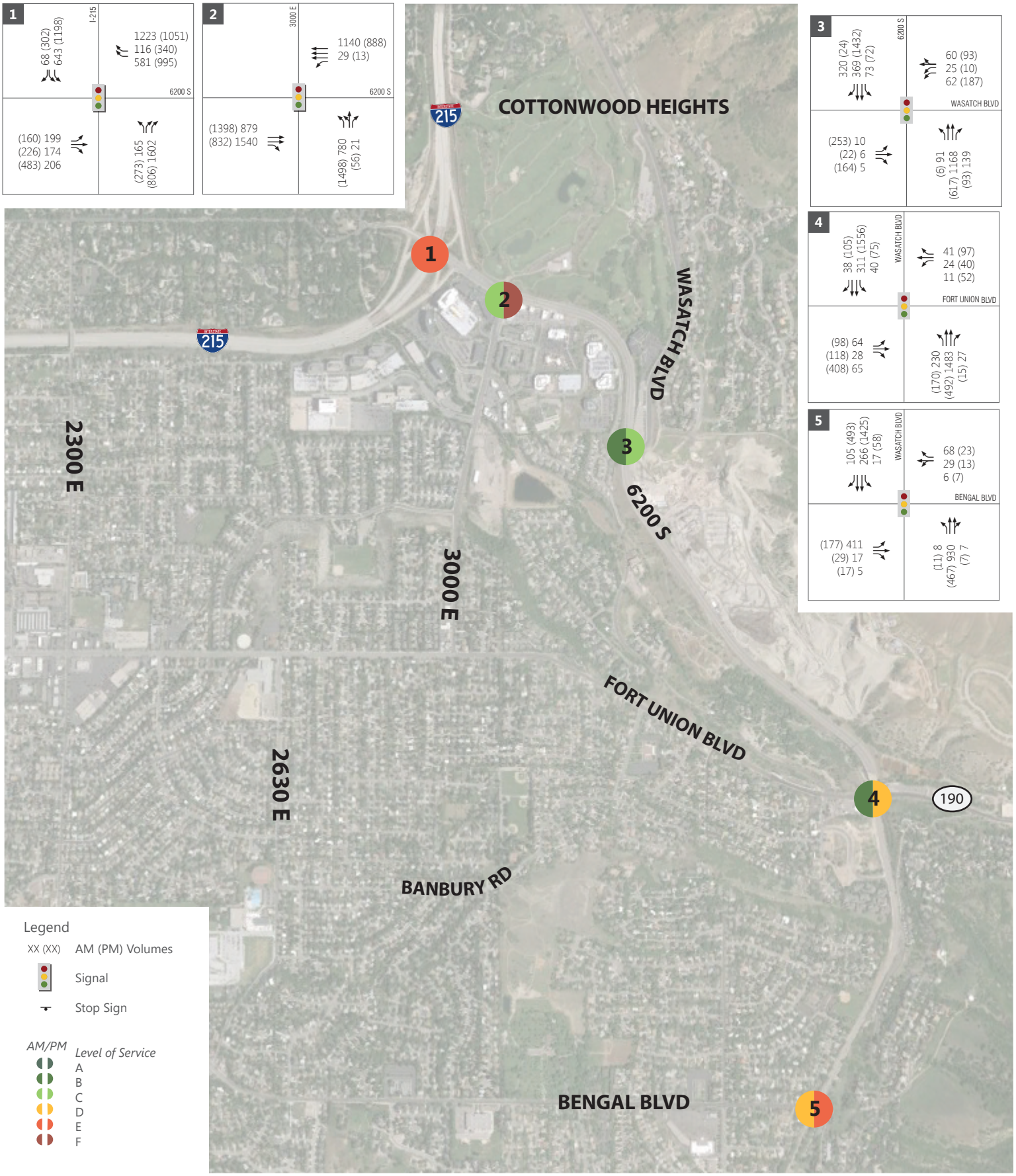

FEHR & PEERS

EXISTING BACKGROUND CONDITIONS

FIGURE 2

FUTURE 2040 BACKGROUND CONDITIONS

PURPOSE

The purpose of the 2040 background conditions analysis is to study the intersections during the peak travel periods of the day under forecasted traffic and geometric conditions. Through this analysis, future traffic operational deficiencies can be identified.

TRAFFIC VOLUMES

Fehr & Peers projected 2040 volumes using the following linear growth rates based on the WFRC travel demand model:

- .8% annual growth for Wasatch Blvd N/S on Bengal Blvd and N/S on Fort Union
- 1.6% annual growth for Bengal Blvd west of Wasatch Blvd
- .7% annual growth for Fort Union west of Wasatch Blvd
- 2.3% annual growth for Big Cottonwood Canyon Rd east of Wasatch Blvd
- .3% annual growth for 6200 South north of Millrock Dr
- .6% annual growth for Wasatch Blvd South of Millrock Dr and East of 6200 S
- .6% and .3% annual growth for 6200 South west and east of 3000 East respectively
- .8% annual growth for 3000 East south of 6200 S
- .5% and .2% annual growth for I-215 North bound Off and On ramps
- .2% and .9% annual growth for I-215 South bound Off and On ramps
- .8% annual growth for 6200 S west of I-215

The preceding growth rates were applied to the existing 2015 volumes to formulate the traffic volumes for the future 2040 background conditions, which are shown in **Figure 3**. It should be noted that City officials have raised questions about assumptions made in the travel demand model – specifically, that the model assumes construction of a missing piece of Highland Drive between 9800 South and 11400 South. This connection requires construction over Dry Creek and through existing residential neighborhoods, and could be challenging to implement. If it remains unbuilt, traffic volumes on Wasatch Boulevard might be higher than indicated by the model. However, for the purpose of this analysis, it was assumed that the Highland Drive connection will be built, consistent with assumptions made in the 2015-2040 Regional Transportation Plan.

LEVEL OF SERVICE ANALYSIS

Using SimTraffic microsimulation software and the HCM 2010 delay thresholds introduced above, the 2040 background AM and PM peak hour LOS were computed for each study intersection (see appendix for detailed LOS reports). The results of this analysis are reported in **Figure 3** and **Table 3**.

TABLE 3 2040 BACKGROUND CONDITIONS PEAK HOUR LEVEL OF SERVICE

Intersection				Worst Movement[1]			Overall Intersection	
ID	Location	Period	Control	Movement[3]	Delay (sec/veh)	LOS	Avg. Delay (sec/veh)[2]	LOS
1	I-215 / 6200 South	AM	Signal	-	-	-	68.4	E
		PM		-	-	-	76.6	E
2	3000 East / 6200 South	AM	Signal	-	-	-	38.3	D
		PM		-	-	-	118.0	F
3	6200 South-Wasatch Blvd / Millrock Dr	AM	Signal	-	-	-	17.7	B
		PM		-	-	-	34.9	C
4	Wasatch Blvd / Fort Union Blvd	AM	Signal	-	-	-	15.3	B
		PM		-	-	-	76.2	E
5	Wasatch Blvd / Bengal Blvd	AM	Signal	-	-	-	41.7	D
		PM		-	-	-	107.1	F

1. This represents the worst movement LOS and delay (seconds/vehicle) and is only reported for unsignalized intersections.
2. This represents the overall intersection LOS and delay (seconds/vehicle).
3. NB=Northbound, SB=Southbound, EB=Eastbound, WB=Westbound, LT=Left-turn, RT=Right-turn, and TH=Through

Source: Fehr & Peers.

As shown in **Table 3**, most of the study intersections operate at LOS D or better for the 2040 background conditions during the AM peak hour, except for the I-215 / 6200 South interchange, which operates at a LOS E due to heavy left turn movements in the northbound direction. The heavy through volumes along Wasatch Blvd impacts all the intersections. In the PM peak hour, all intersections are projected to operate at a LOS E or worse, except for 6200 South-Wasatch Blvd / Millrock Dr.

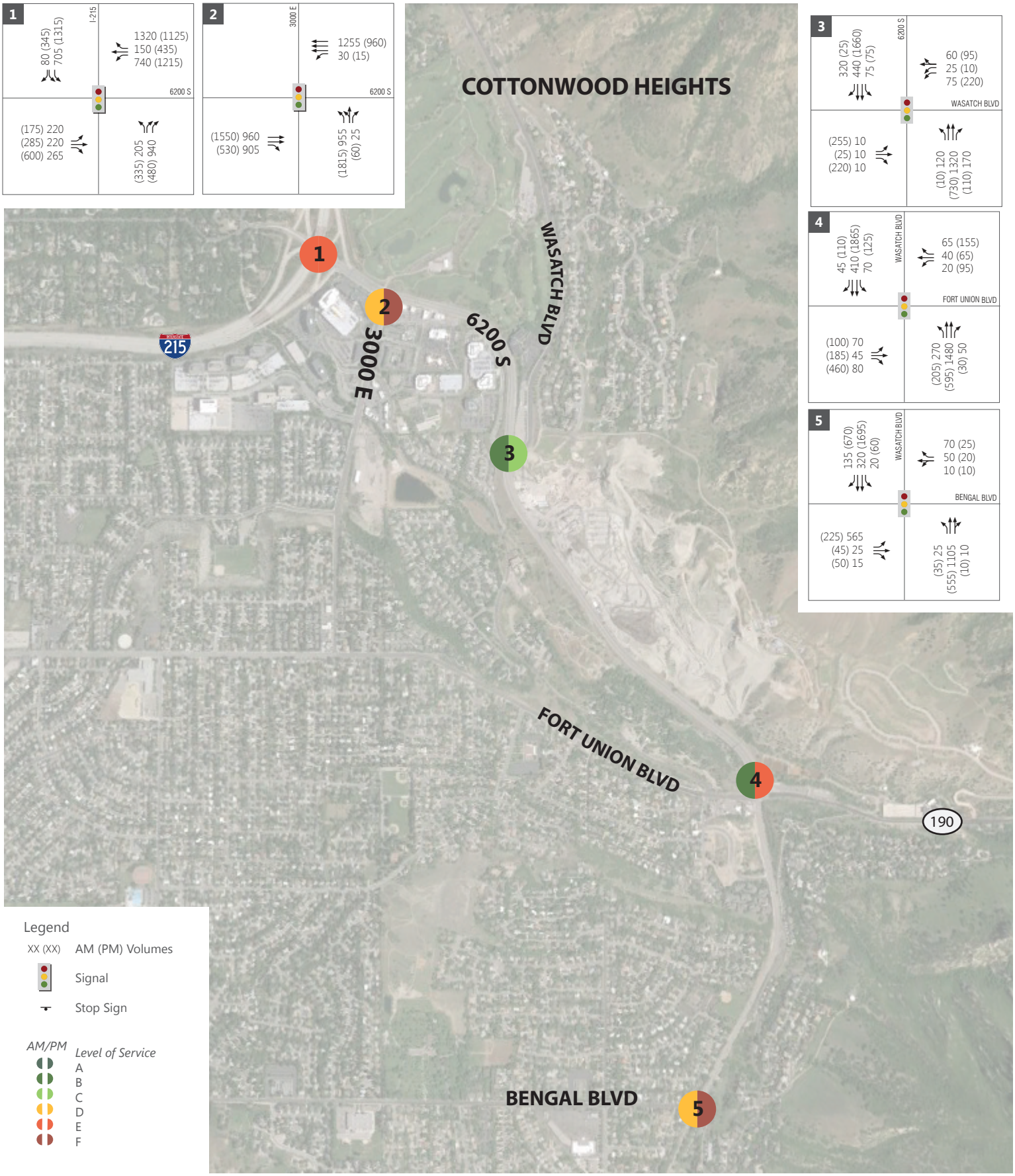

FEHR & PEERS

2040 BACKGROUND CONDITIONS

FIGURE 3

TRIP GENERATION

Trip generation models provide estimates of the number of trips (by purpose and by mode) produced by or attracted to a given land use or activity as a function of the demographic, socioeconomic, locational, and land use characteristics of the zone.

MXD +

MXD+ is a tool that allows users to estimate internal trip capture and external trips made by driving, walk/bicycle, and transit modes. It was integrated by Fehr & Peers by combining two methodologies; the EPA MXD methodology and NCHRP 684 (ITE Handbook Method) methodology. The MXD+ method generates trip generation for trips produced and attracted by mixed-use developments and has proven successful in land use related projects and is used on most if not all trip generation related projects.

By far, the most common trip generation method used in the industry is ITEs Trip Generation Manual (2012). ITEs Trip Generation Manual does not estimate trip generation by purpose or by mode other than vehicle; it estimates vehicle trips based on a single independent variable, such as dwelling units, thousand square feet (ksf), acres, or employees. Fehr & Peers strives to use the most appropriate tool for each project. ITEs Trip Generation Manual is generally consulted as a first step for any land use project. The ITE Trip Generation Handbook procedure, which provides guidance on how to apply weighted average trip rates and fitted curve equations in the Trip Generation Manual, is followed to ensure that proper data application is used.

The MXD+ method presented a trip reduction of 4,336 vehicles daily, 258 during the AM peak hour and 191 during the PM peak hour when compared to the ITE (Handbook) trips. The trip generation comparison and percent of internal capture for the AM and PM Peaks are shown in Table 5.

TABLE 5 TRIP GENERATION COMPARISON AND INTERNAL CAPTURE

	ITE (Trip Gen)	ITE (Hand-book)	MXD +	PERCENT INTERNAL CAPTURE			
Daily Traffic	44,386	44,386*	40,050	Method	Daily	AM Peak Hour	PM Peak Hour
AM Peak Hour	3,929	3,621	3,363	ITE (Internal Capture)	0%*	7.8%	13.1%
PM Peak Hour	5,184	4,505	4,314	MXD+	9.70%	14.4%	16.7%

*The ITE handbook only specifies reduction for AM and PM peak hour trips due to internalization. ITE handbook does not contain daily estimates. MXD+ is used in conjunction with the ITE Handbook.
Source: Fehr & Peers.

TRIP DISTRIBUTION AND ASSIGNMENT

Project traffic was assigned to the roadway network based on the proximity of access points to major streets and roadways and the distribution of traffic of the existing intersections. Existing travel patterns observed during data collection also provided helpful guidance to establish these distribution percentages. The project-generated trips were distributed to and from the following directions (**Figure 4** shows the turning movements of the project traffic):

- 15% North (via Wasatch Blvd)
- 5% East (via Bengal Blvd)
- 5% West (via Fort Union)
- 15% East (via Fort Union)
- 7% West (via Wasatch Blvd)
- 3% North (via 3000 E)
- 20% South (via I-215)
- 20% North (via I-215)
- 10% East (via 6200 S)

FUTURE 2040 PLUS PROJECT CONDITIONS

PURPOSE

The purpose of the 2040 plus project conditions analysis is to study the intersections during the peak travel periods of the day under future plus full build-out of the proposed project traffic and geometric conditions. Through this analysis, future traffic operational deficiencies can be identified.

LEVEL OF SERVICE ANALYSIS

Using SimTraffic microsimulation software and the HCM 2010 delay thresholds introduced above, the 2040 plus project AM and PM peak hour LOS were computed for each study intersection (see appendix for detailed LOS reports). The projected trips for the 2040 conditions are reported in **Figure 4**. The results of this analysis are reported in **Figure 5** and **Table 4**.

This results include some modifications made to the network in order to mitigate future traffic demands. Dual lefts were implemented at future development accesses (Access 2 and 3) in the south and west bound direction. Also all signal timings were optimized to improve traffic flow in the model.

As shown in **Table 4**, most of the study intersections operate at LOS E or worse for the 2040 plus project conditions during the PM peak hour except for 3000 East / 6200 South, which shows improvements because of signal timing optimization. Intersections operate poorly because of the heavy traffic along Wasatch Blvd, also left turning movements into and out of Wasatch Blvd causing major delays in the network. During the AM peak hour all intersections operate at a LOS C or worse. I-215 / 6200 South and Access 4 both operate at LOS F during both AM and PM peak hours.

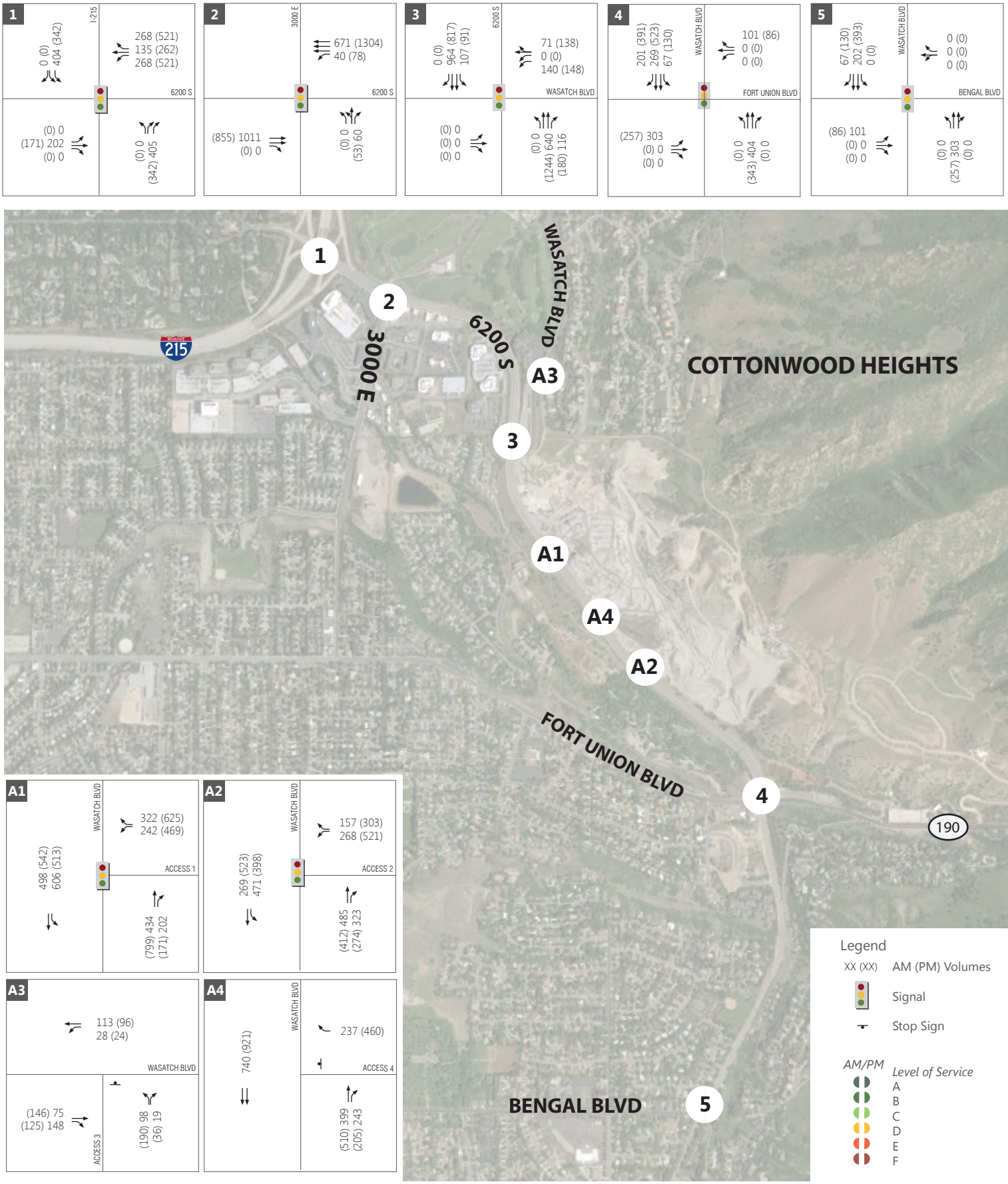

FEHR & PEERS

PROJECT TRIPS

FIGURE 4

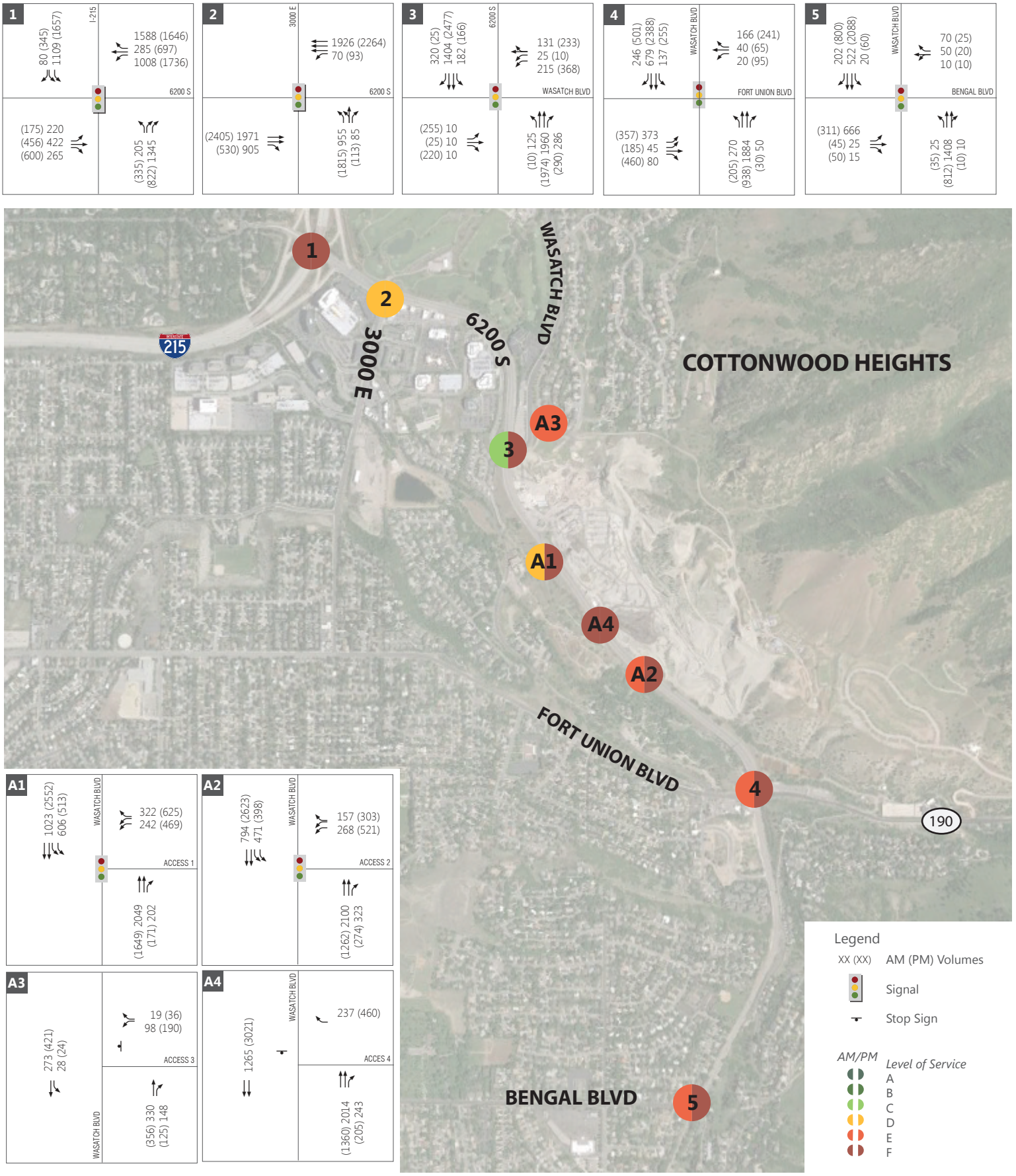

FEHR & PEERS

2040 + PROJECT CONDITIONS

FIGURE 5

TABLE 4 FUTURE 2040 PLUS PROJECT CONDITIONS PEAK HOUR LEVEL OF SERVICE

Intersection				Worst Movement[1]			Overall Intersection	
ID	Location	Period	Control	Movement[3]	Delay (sec/veh)	LOS	Avg. Delay (sec/veh)[2]	LOS
1	I-215 / 6200 South	AM	Signal	-	-	-	91.3	F
		PM		-	-	-	95.5	F
2	3000 East / 6200 South	AM	Signal	-	-	-	36.3	D
		PM		-	-	-	49.4	D
3	6200 South-Wasatch Blvd / Millrock Dr	AM	Signal	-	-	-	31.3	C
		PM		-	-	-	112.5	F
4	Wasatch Blvd / Fort Union Blvd	AM	Signal	-	-	-	69.1	E
		PM		-	-	-	171.1	F
5	Wasatch Blvd / Bengal Blvd	AM	Signal	-	-	-	70.0	E
		PM		-	-	-	133.6	F
6	Access 1	AM	Signal	-	-	-	36.3	D
		PM		-	-	-	183.8	F
7	Access 2	AM	Signal	-	-	-	60.0	E
		PM		-	-	-	159.1	F
8	Access 3	AM	Side-street Stop	NWLT	40.3	E	-	-
		PM		NWLT	39.4	E	-	-
9	Access 4	AM	Side-street Stop	WBRT	95.6	F	-	-
		PM		WBRT	689.2	F	-	-

1. This represents the worst movement LOS and delay (seconds/vehicle) and is only reported for unsignalized intersections.
2. This represents the overall intersection LOS and delay (seconds/vehicle).
3. NB=Northbound, SB=Southbound, EB=Eastbound, WB=Westbound, LT=Left-turn, RT=Right-turn, TH=Through, NWLT=Northwest Left-turn and WBRT= Westbound Right-turn

Source: Fehr & Peers.

PLANNED TRANSPORTATION PROJECTS

Several transportation projects are planned by UDOT and UTA, either in the near or long-term future. These are summarized below.

Roadway improvement projects:

UDOT plans to upgrade the Wasatch Boulevard/SR-210/SR-190 intersection to a "high-T", in order to facilitate movement along Wasatch Boulevard into Little Cottonwood Canyon. Design was under way in 2015 and construction is anticipated in 2016. While this intersection is technically outside the study area defined for this project, these improvements are anticipated to improve flow for traffic heading northbound on Wasatch Boulevard.

Cottonwood Heights City intends to make operational improvements to Fort Union Boulevard, including signal timing modifications, minor widening, and access management. However, these improvements are planned between Union Park Boulevard and 3000 East, which is outside the boundary of this study.

The Wasatch Front Regional Council Regional Transportation Plan (RTP) for 2040 includes a widening project on Wasatch Boulevard from 3000 East to 6200 South, taking the roadway from 4 to 6 lanes. However, this is shown in the RTP as an "unfunded" project, which also means that it is not included in the travel demand model reflecting proposed transportation improvements. Outside the immediate study area, RTP project S-193 identifies widening improvements on Wasatch Boulevard from Bengal Boulevard to Little Cottonwood Canyon. This project would widen the roadway from two to four lanes.

Transit improvement projects:

Several potential transit improvement projects are identified in various phases of the Long Range Transportation Plan prepared by WFRC. These include several enhanced bus or bus rapid transit (BRT) projects, as outlined below:

- The Cottonwood-Kearns line, a proposed BRT line in Phase 3 (2035-2040) of the Long Range Transportation Plan, would run along Fort Union Boulevard, 3000 East, and Wasatch Boulevard in Cottonwood Heights, continuing southward on Wasatch Boulevard to Little Cottonwood Canyon.
- The Salt Lake City – Foothill Drive – Wasatch Boulevard line, an enhanced bus project in the unfunded phase (2040 or later) of the Long Range Transportation Plan, would utilize Wasatch Boulevard between the I-215/6200 South interchange and Big Cottonwood Canyon, as part of a larger line connecting Salt Lake City with Little Cottonwood Canyon.

The Mountain Accord planning process has identified several potential transit projects in this area as well. For the time being, these include a possible increase in bus service accessing Big and Little Cottonwood Canyons. The planning process has also included discussion of a fixed-rail option in Little Cottonwood Canyon, connecting to the main north-south TRAX line via either Fort Union Boulevard or 9400 South; however, recent Mountain Accord decisions seem to indicate that fixed-rail service may be farther in the future than originally thought. Other potential projects related to Mountain Accord include the construction of a park-and-ride facility near the gravel pit site; while specific information on size

requirements is not available, this facility was considered when developing renderings and land use plans for the gravel pit as part of the Wasatch Boulevard Corridor Master Plan.

CONCLUSIONS

For the existing 2015 conditions most of the study intersections operate at LOS B or worse for the existing conditions during the AM peak hour, except for the I-215 / 6200 South interchange, which operates at a LOS E. In the PM peak hour, all intersections currently operate at a LOS E or worse (except for 6200 South-Wasatch Blvd / Millrock Dr and Wasatch Blvd / Fort Union Blvd), because of heavy northbound left turns.

For the future 2040 background conditions most of the study intersections operate at LOS D or better for the 2040 background conditions during the AM peak hour, except for the I-215 / 6200 South interchange, which operates at a LOS E due to heavy left turn movements in the northbound direction. The heavy through volumes along Wasatch Blvd impacts all the intersections. In the PM peak hour, all intersections are projected to operate at a LOS E or worse, except for 6200 South-Wasatch Blvd / Millrock Dr.

For the 2040 plus project conditions most of the study intersections operate at LOS E or worse during the PM peak hour except for 3000 East / 6200 South, which shows improvements because of signal timing optimization. Intersections operate poorly because of the heavy traffic along Wasatch Blvd, and also left turning movements into and out of Wasatch Blvd are causing major delays in the network. During the AM peak hour all intersections operate at a LOS C or worse. I-215 / 6200 South and Access 4 both operate at LOS F during both AM and PM peak hours. The summary of LOS for all scenarios is shown in **Table 6**.

TABLE 6 LOS SUMMARY

Intersection			Existing 2015	Future 2040 Background	Future 2040 Plus Project
ID	Location	Period	LOS & Sec/Veh[1]	LOS & Sec/Veh[1]	LOS & Sec/Veh[1]
1	I-215 / 6200 South	AM	63.9 / E	68.4 / E	91.3 / F
		PM	61.9 / E	76.6 / E	95.5 / F
2	3000 East / 6200 South	AM	25.5 / C	38.3 / D	36.3 / D
		PM	101.7 / F	118.0 / F	49.4 / D
3	6200 South-Wasatch Blvd / Millrock Dr	AM	15.1 / B	17.7 / B	31.3 / C
		PM	22.7 / C	34.9 / C	112.5 / F
4	Wasatch Blvd / Fort Union Blvd	AM	13.1 / B	15.3 / B	69.1 / E
		PM	35.3 / C	76.2 / E	171.1 / F
5	Wasatch Blvd / Bengal Blvd	AM	51.1 / D	41.7 / D	70.0 / E
		PM	61.1 / E	107.1 / F	133.6 / F
6	Access 1	AM	-		36.3 / D
		PM	-		183.8 / F
7	Access 2	AM	-		60.0 / E
		PM	-		159.1 / F
8	Access 3	AM	-		40.3 / E
		PM	-		39.4 / E
9	Access 4	AM	-		95.6 / F
		PM	-		689.2 / F

1. Overall intersection LOS and average delay (seconds/vehicle) for the signalized intersections and worst movement LOS and average delay for the unsignalized intersections.

Source: Fehr & Peers, 2016

APPENDIX

FEHR & PEERS
TRANSPORTATION CONSULTANTS

Intersection Turning Movement Summary

Intersection:		**Date:**	**10-22-15, Thu**
North/South:	**Wasatch Boulevard**	**Day of Week Adjustment:**	**100.0%**
East/West:	**Bengal Boulevard**	**Month of Year Adjustment:**	**100.0%**
Jurisdiction:	**Cottonwood**	**Adjustment Station #:**	
Project Title:	**Wasatch Boulevard Corridor**	**Growth Rate:**	**0.0%**
Project No:	**15-1089**	**Number of Years:**	**0**
Weather:			

AM PEAK HOUR PERIOD: **7:30-8:30**
AM PEAK 15 MINUTE PERIOD: **7:30-7:45**
AM PHF: **0.93**

NOON PEAK HOUR PERIOD:
NOON PEAK 15 MINUTE PERIOD:
NOON PHF: **####**

PM PEAK HOUR PERIOD: **17:00-18:00**
PM PEAK 15 MINUTE PERIOD: **17:15-17:30**
PM PHF: **0.85**

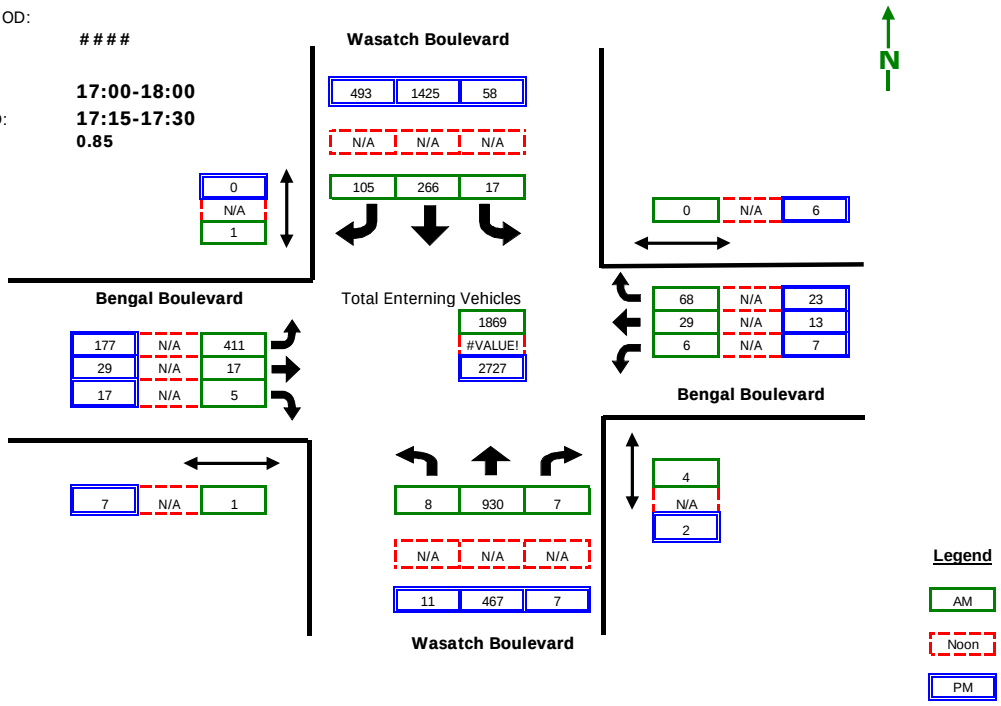

RAW COUNT SUMMARIES	Wasatch Boulevard Northbound				Wasatch Boulevard Southbound				Bengal Boulevard Eastbound				Bengal Boulevard Westbound			
	Left	Thru	Right	Peds	Left	Thru	Right	Peds	Left	Thru	Right	Peds	Left	Thru	Right	Peds

AM PERIOD COUNTS

Period	A	B	C	D	E	F	G	H	I	J	K	L	M	N	O	P	TOTAL
7:00-7:15	0	152	1	2	0	54	10	0	86	1	0	0	1	2	13	1	320
7:15-7:30	1	155	0	0	2	48	16	0	94	1	3	0	1	5	15	2	341
7:30-7:45	2	243	0	0	1	76	33	0	117	1	0	0	5	10	14	0	502
7:45-8:00	1	221	4	1	6	65	26	0	97	3	3	0	0	12	19	0	457
8:00-8:15	2	230	3	0	5	57	23	0	92	10	1	1	0	5	16	0	444
8:15-8:30	3	236	0	3	5	68	23	1	105	3	1	0	1	2	19	0	466
8:30-8:45	7	206	0	0	1	80	42	0	87	2	2	0	1	3	9	1	440
8:45-9:00	4	193	0	3	2	83	31	0	88	4	3	0	2	3	19	0	432

NOON PERIOD COUNTS

Period	A	B	C	D	E	F	G	H	I	J	K	L	M	N	O	P	TOTAL
11:00-11:15	0	0	0	0	0	0	0	0	0	0	0	0	0	0	0	0	0
11:15-11:30	0	0	0	0	0	0	0	0	0	0	0	0	0	0	0	0	0
11:30-11:45	0	0	0	0	0	0	0	0	0	0	0	0	0	0	0	0	0
11:45-12:00	0	0	0	0	0	0	0	0	0	0	0	0	0	0	0	0	0
12:00-12:15	0	0	0	0	0	0	0	0	0	0	0	0	0	0	0	0	0
12:15-12:30	0	0	0	0	0	0	0	0	0	0	0	0	0	0	0	0	0
12:30-12:45	0	0	0	0	0	0	0	0	0	0	0	0	0	0	0	0	0
12:45-13:00	0	0	0	0	0	0	0	0	0	0	0	0	0	0	0	0	0

PM PERIOD COUNTS

Period	A	B	C	D	E	F	G	H	I	J	K	L	M	N	O	P	TOTAL
16:00-16:15	1	127	0	0	8	217	74	0	31	6	0	0	2	4	7	1	477
16:15-16:30	1	118	4	0	8	216	88	0	35	7	1	1	0	6	8	1	492
16:30-16:45	1	127	2	1	6	263	71	1	41	11	2	0	4	8	11	0	547
16:45-17:00	2	94	1	1	14	307	98	0	36	4	2	0	4	1	7	0	570
17:00-17:15	1	112	1	2	21	357	107	0	45	10	4	3	1	2	8	1	669
17:15-17:30	1	139	0	0	22	413	151	0	56	2	6	0	2	4	7	0	803
17:30-17:45	3	121	3	0	5	336	122	0	50	9	6	2	0	4	6	0	665
17:45-18:00	6	95	3	0	10	319	113	0	26	8	1	2	4	3	2	5	590

FEHR & PEERS
TRANSPORTATION CONSULTANTS

Intersection Turning Movement Summary

Intersection:		**Date:**	**10-21-15, Wed**
	North/South: I-215	**Day of Week Adjustment:**	**100.0%**
	East/West: 6200 South	**Month of Year Adjustment:**	**100.0%**
Jurisdiction:	**Cottonwood**	**Adjustment Station #:**	
Project Title:	**Wasatch Boulevard Corridor**	**Growth Rate:**	**0.0%**
Project No:	**15-1089**	**Number of Years:**	**0**
Weather:			

AM PEAK HOUR PERIOD: **7:30-8:30**
AM PEAK 15 MINUTE PERIOD: **7:45-8:00**
AM PHF: **0.92**

NOON PEAK HOUR PERIOD:
NOON PEAK 15 MINUTE PERIOD:
NOON PHF: **####**

PM PEAK HOUR PERIOD: **17:00-18:00**
PM PEAK 15 MINUTE PERIOD: **17:15-17:30**
PM PHF: **0.85**

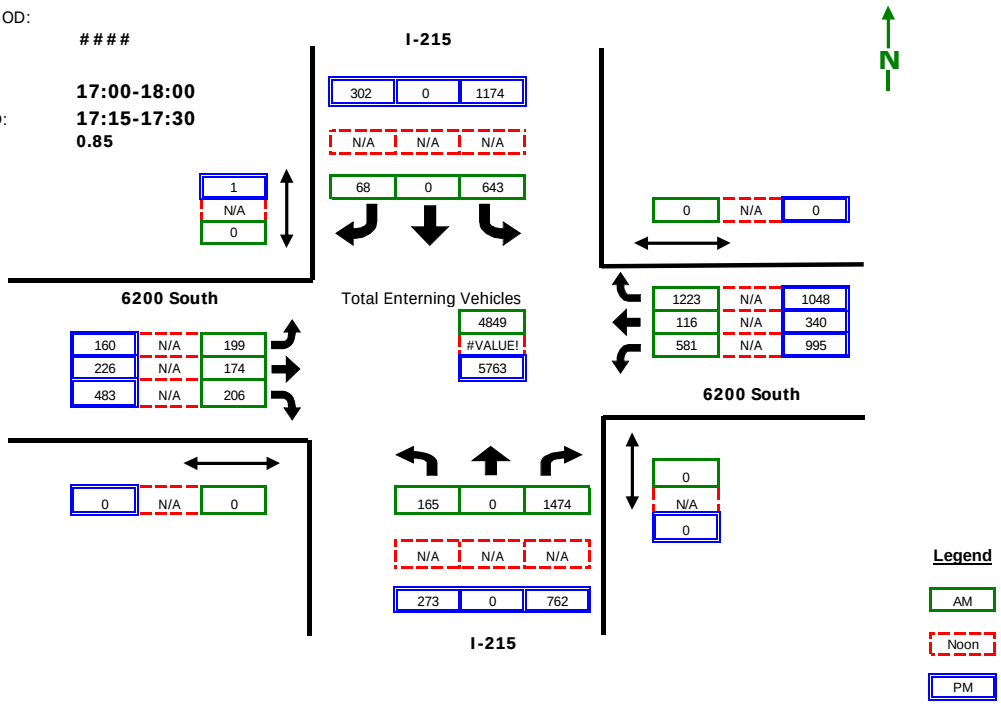

RAW COUNT SUMMARIES	I-215 Northbound Left	Thru	Right	Peds	I-215 Southbound Left	Thru	Right	Peds	6200 South Eastbound Left	Thru	Right	Peds	6200 South Westbound Left	Thru	Right	Peds	
AM PERIOD COUNTS																	
Period	**A**	**B**	**C**	**D**	**E**	**F**	**G**	**H**	**I**	**J**	**K**	**L**	**M**	**N**	**O**	**P**	**TOTAL**
7:00-7:15	31	0	213	0	77	0	2	0	31	21	38	0	84	11	242	0	750
7:15-7:30	25	0	232	0	85	0	16	0	30	26	48	0	110	29	260	0	861
7:30-7:45	23	0	275	0	130	0	19	0	56	38	52	0	133	19	328	0	1073
7:45-8:00	45	0	408	0	188	0	21	0	59	43	60	0	186	34	277	0	1321
8:00-8:15	52	0	412	0	149	0	13	0	40	44	39	0	124	27	319	0	1219
8:15-8:30	45	0	379	0	176	0	15	0	44	49	55	0	138	36	299	0	1236
8:30-8:45	55	0	406	0	190	0	23	0	35	50	72	0	131	51	270	0	1283
8:45-9:00	52	0	467	0	213	0	25	0	23	59	43	0	124	44	195	0	1245
NOON PERIOD COUNTS																	
Period	**A**	**B**	**C**	**D**	**E**	**F**	**G**	**H**	**I**	**J**	**K**	**L**	**M**	**N**	**O**	**P**	**TOTAL**
11:00-11:15	0	0	0	0	0	0	0	0	0	0	0	0	0	0	0	0	0
11:15-11:30	0	0	0	0	0	0	0	0	0	0	0	0	0	0	0	0	0
11:30-11:45	0	0	0	0	0	0	0	0	0	0	0	0	0	0	0	0	0
11:45-12:00	0	0	0	0	0	0	0	0	0	0	0	0	0	0	0	0	0
12:00-12:15	0	0	0	0	0	0	0	0	0	0	0	0	0	0	0	0	0
12:15-12:30	0	0	0	0	0	0	0	0	0	0	0	0	0	0	0	0	0
12:30-12:45	0	0	0	0	0	0	0	0	0	0	0	0	0	0	0	0	0
12:45-13:00	0	0	0	0	0	0	0	0	0	0	0	0	0	0	0	0	0
PM PERIOD COUNTS																	
Period	**A**	**B**	**C**	**D**	**E**	**F**	**G**	**H**	**I**	**J**	**K**	**L**	**M**	**N**	**O**	**P**	**TOTAL**
16:00-16:15	42	0	131	0	154	0	54	0	24	46	92	0	253	57	220	0	1073
16:15-16:30	67	0	149	0	206	0	47	0	25	54	84	0	200	68	207	0	1107
16:30-16:45	64	0	164	0	205	0	68	0	23	57	84	0	214	59	215	0	1153
16:45-17:00	56	0	158	0	253	0	61	0	27	38	89	0	225	69	200	0	1176
17:00-17:15	82	0	176	0	293	0	67	0	41	52	150	0	316	76	286	0	1539
17:15-17:30	59	0	217	0	334	0	80	0	54	70	139	0	299	106	338	0	1696
17:30-17:45	78	0	187	0	283	0	86	1	29	58	94	0	198	78	247	0	1338
17:45-18:00	54	0	182	0	264	0	69	0	36	46	100	0	182	80	177	0	1190

FEHR & PEERS
TRANSPORTATION CONSULTANTS

Intersection Turning Movement Summary

Intersection:		**Date:**	**10-21-15, Wed**
	North/South: **Wasatch Boulevard**	**Day of Week Adjustment:**	**100.0%**
	East/West: **Fort Union Boulevard**	**Month of Year Adjustment:**	**100.0%**
Jurisdiction:	**Cottonwood**	**Adjustment Station #:**	
Project Title:	**Wasatch Boulevard Corridor**	**Growth Rate:**	**0.0%**
Project No:	**15-1089**	**Number of Years:**	**0**
Weather:			

AM PEAK HOUR PERIOD: **7:30-8:30**
AM PEAK 15 MINUTE PERIOD: **8:00-8:15**
AM PHF: **0.87**

NOON PEAK HOUR PERIOD:
NOON PEAK 15 MINUTE PERIOD:
NOON PHF: **####**

PM PEAK HOUR PERIOD: **17:00-18:00**
PM PEAK 15 MINUTE PERIOD: **17:15-17:30**
PM PHF: **0.92**

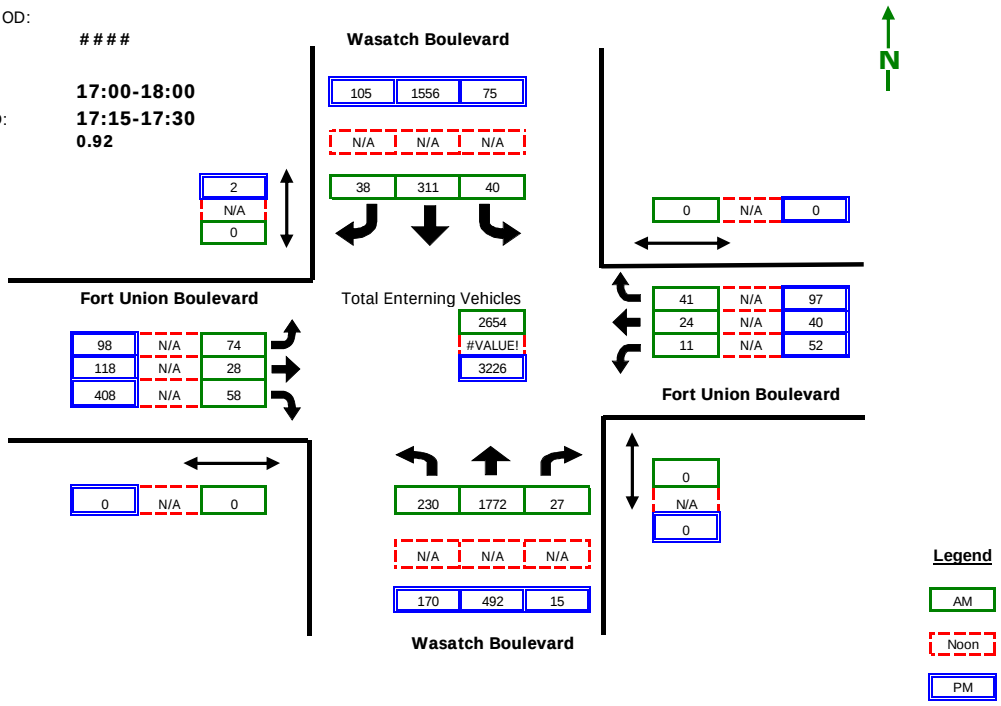

RAW COUNT SUMMARIES	Wasatch Boulevard Northbound				Wasatch Boulevard Southbound				Fort Union Boulevard Eastbound				Fort Union Boulevard Westbound				
	Left	Thru	Right	Peds	Left	Thru	Right	Peds	Left	Thru	Right	Peds	Left	Thru	Right	Peds	
AM PERIOD COUNTS																	
Period	**A**	**B**	**C**	**D**	**E**	**F**	**G**	**H**	**I**	**J**	**K**	**L**	**M**	**N**	**O**	**P**	**TOTAL**
7:00-7:15	8	216	7	0	7	51	7	0	9	5	7	0	1	2	9	0	329
7:15-7:30	14	257	10	0	20	56	5	0	15	7	3	0	7	2	10	0	406
7:30-7:45	35	391	8	0	10	83	8	0	25	6	6	0	3	7	13	0	595
7:45-8:00	53	466	7	0	12	85	17	0	13	7	11	0	4	5	9	0	689
8:00-8:15	63	550	7	0	11	64	8	0	24	8	14	0	1	4	11	0	765
8:15-8:30	79	365	5	0	7	79	5	0	12	7	27	0	3	8	8	0	605
8:30-8:45	53	292	6	0	14	94	10	0	10	12	20	0	2	2	4	0	519
8:45-9:00	47	292	7	0	15	97	7	1	12	5	24	0	2	2	5	0	515
NOON PERIOD COUNTS																	
Period	**A**	**B**	**C**	**D**	**E**	**F**	**G**	**H**	**I**	**J**	**K**	**L**	**M**	**N**	**O**	**P**	**TOTAL**
11:00-11:15	0	0	0	0	0	0	0	0	0	0	0	0	0	0	0	0	0
11:15-11:30	0	0	0	0	0	0	0	0	0	0	0	0	0	0	0	0	0
11:30-11:45	0	0	0	0	0	0	0	0	0	0	0	0	0	0	0	0	0
11:45-12:00	0	0	0	0	0	0	0	0	0	0	0	0	0	0	0	0	0
12:00-12:15	0	0	0	0	0	0	0	0	0	0	0	0	0	0	0	0	0
12:15-12:30	0	0	0	0	0	0	0	0	0	0	0	0	0	0	0	0	0
12:30-12:45	0	0	0	0	0	0	0	0	0	0	0	0	0	0	0	0	0
12:45-13:00	0	0	0	0	0	0	0	0	0	0	0	0	0	0	0	0	0
PM PERIOD COUNTS																	
Period	**A**	**B**	**C**	**D**	**E**	**F**	**G**	**H**	**I**	**J**	**K**	**L**	**M**	**N**	**O**	**P**	**TOTAL**
16:00-16:15	30	135	2	0	24	231	10	1	11	8	73	0	5	6	20	0	555
16:15-16:30	20	117	1	0	24	268	17	2	15	16	57	0	14	15	20	0	584
16:30-16:45	66	197	7	0	19	306	16	2	13	13	88	0	6	6	11	0	748
16:45-17:00	24	128	3	0	34	327	21	0	21	17	74	0	8	14	15	0	686
17:00-17:15	20	150	3	0	11	437	25	0	30	27	97	0	12	10	15	0	837
17:15-17:30	70	142	1	0	26	392	27	0	27	41	107	0	11	18	19	0	881
17:30-17:45	39	81	5	0	19	378	21	0	18	25	108	0	18	5	33	0	750
17:45-18:00	41	119	6	0	19	349	32	2	23	25	96	0	11	7	30	0	758

FEHR & PEERS
TRANSPORTATION CONSULTANTS

Intersection Turning Movement Summary

Intersection:		**Date:**	**10-21-15, Wed**
North/South:	**6200 S**	**Day of Week Adjustment:**	**100.0%**
East/West:	**Wasatch Boulevard**	**Month of Year Adjustment:**	**100.0%**
Jurisdiction:	**Cottonwood**	**Adjustment Station #:**	
Project Title:	**Wasatch Boulevard Corridor**	**Growth Rate:**	**0.0%**
Project No:	**15-1089**	**Number of Years:**	**0**
Weather:			

AM PEAK HOUR PERIOD: **7:30-8:30**
AM PEAK 15 MINUTE PERIOD: **7:45-8:00**
AM PHF: **0.94**

NOON PEAK HOUR PERIOD:
NOON PEAK 15 MINUTE PERIOD:
NOON PHF: **####**

PM PEAK HOUR PERIOD: **17:00-18:00**
PM PEAK 15 MINUTE PERIOD: **17:00-17:15**
PM PHF: **0.90**

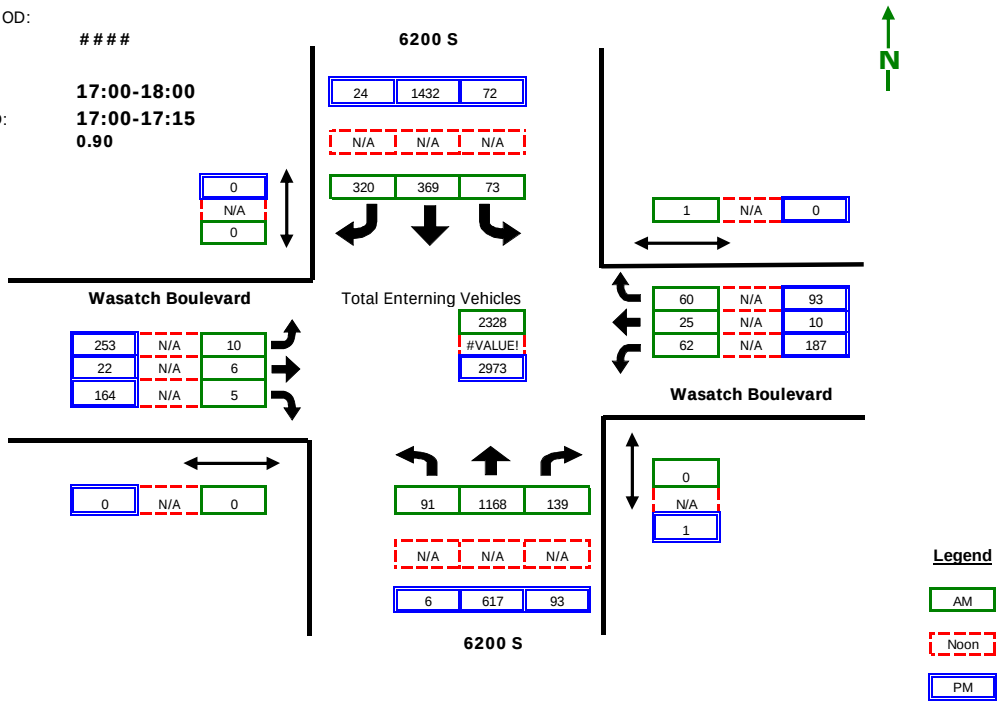

RAW COUNT SUMMARIES	6200 S Northbound				6200 S Southbound				Wasatch Boulevard Eastbound				Wasatch Boulevard Westbound				
	Left	Thru	Right	Peds	Left	Thru	Right	Peds	Left	Thru	Right	Peds	Left	Thru	Right	Peds	
AM PERIOD COUNTS																	
Period	**A**	**B**	**C**	**D**	**E**	**F**	**G**	**H**	**I**	**J**	**K**	**L**	**M**	**N**	**O**	**P**	**TOTAL**
7:00-7:15	7	212	18	0	10	63	37	0	0	1	1	0	7	4	10	0	370
7:15-7:30	10	253	23	1	17	66	45	0	2	0	2	0	12	1	12	0	443
7:30-7:45	17	323	42	0	16	103	64	0	2	1	1	0	26	6	15	0	616
7:45-8:00	22	312	34	0	15	87	104	0	2	0	2	0	24	10	9	0	621
8:00-8:15	33	266	27	0	29	75	86	0	4	5	2	0	6	6	25	1	564
8:15-8:30	19	267	36	0	13	104	66	0	2	0	0	0	6	3	11	0	527
8:30-8:45	21	258	18	0	29	93	50	1	7	1	0	0	26	3	21	0	527
8:45-9:00	23	224	28	0	46	89	50	0	5	2	5	0	20	4	16	0	512
NOON PERIOD COUNTS																	
Period	**A**	**B**	**C**	**D**	**E**	**F**	**G**	**H**	**I**	**J**	**K**	**L**	**M**	**N**	**O**	**P**	**TOTAL**
11:00-11:15	0	0	0	0	0	0	0	0	0	0	0	0	0	0	0	0	0
11:15-11:30	0	0	0	0	0	0	0	0	0	0	0	0	0	0	0	0	0
11:30-11:45	0	0	0	0	0	0	0	0	0	0	0	0	0	0	0	0	0
11:45-12:00	0	0	0	0	0	0	0	0	0	0	0	0	0	0	0	0	0
12:00-12:15	0	0	0	0	0	0	0	0	0	0	0	0	0	0	0	0	0
12:15-12:30	0	0	0	0	0	0	0	0	0	0	0	0	0	0	0	0	0
12:30-12:45	0	0	0	0	0	0	0	0	0	0	0	0	0	0	0	0	0
12:45-13:00	0	0	0	0	0	0	0	0	0	0	0	0	0	0	0	0	0
PM PERIOD COUNTS																	
Period	**A**	**B**	**C**	**D**	**E**	**F**	**G**	**H**	**I**	**J**	**K**	**L**	**M**	**N**	**O**	**P**	**TOTAL**
16:00-16:15	3	159	15	0	14	210	5	0	59	4	34	0	21	2	20	0	546
16:15-16:30	2	155	20	0	14	256	4	0	49	4	23	0	49	4	12	0	592
16:30-16:45	2	161	22	0	13	310	1	0	47	7	34	0	30	2	10	0	639
16:45-17:00	2	123	16	0	16	296	4	0	29	0	34	0	38	0	23	0	581
17:00-17:15	1	158	30	0	19	359	5	0	114	5	52	0	54	2	25	0	824
17:15-17:30	0	162	28	0	19	359	5	0	64	8	52	0	42	2	21	0	762
17:30-17:45	3	167	21	1	16	359	5	0	53	6	39	0	46	2	27	0	744
17:45-18:00	2	130	14	0	18	355	9	0	22	3	21	0	45	4	20	0	643

FEHR & PEERS
TRANSPORTATION CONSULTANTS

Intersection Turning Movement Summary

Intersection:		**Date:**	**10-22-15, Thu**
	North/South: 3000 East	**Day of Week Adjustment:**	**100.0%**
	East/West: 6200 South	**Month of Year Adjustment:**	**100.0%**
Jurisdiction:	**Cottonwood**	**Adjustment Station #:**	
Project Title:	**Wasatch Boulevard Corridor**	**Growth Rate:**	**0.0%**
Project No:	**15-1089**	**Number of Years:**	**0**
Weather:			

AM PEAK HOUR PERIOD: **7:30-8:30**
AM PEAK 15 MINUTE PERIOD: **8:00-8:15**
AM PHF: **0.93**

NOON PEAK HOUR PERIOD:
NOON PEAK 15 MINUTE PERIOD:
NOON PHF: **####**

PM PEAK HOUR PERIOD: **17:00-18:00**
PM PEAK 15 MINUTE PERIOD: **17:00-17:15**
PM PHF: **0.93**

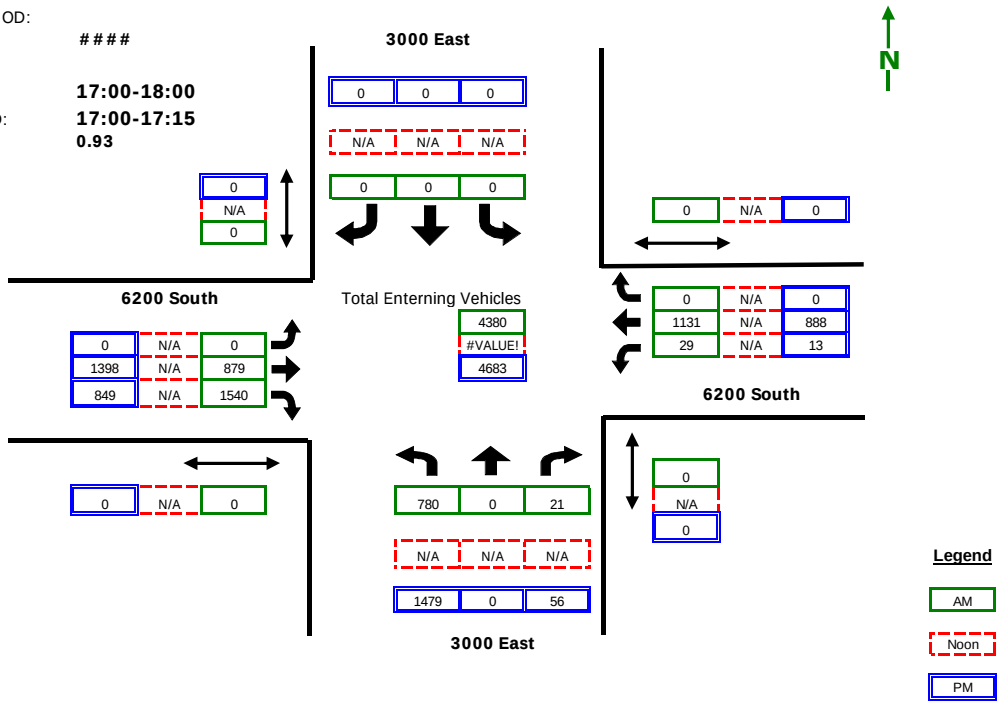

RAW COUNT SUMMARIES	3000 East Northbound Left	Thru	Right	Peds	3000 East Southbound Left	Thru	Right	Peds	6200 South Eastbound Left	Thru	Right	Peds	6200 South Westbound Left	Thru	Right	Peds	
AM PERIOD COUNTS																	
Period	**A**	**B**	**C**	**D**	**E**	**F**	**G**	**H**	**I**	**J**	**K**	**L**	**M**	**N**	**O**	**P**	**TOTAL**
7:00-7:15	134	1	1	0	0	0	0	0	0	118	152	0	4	180	0	0	590
7:15-7:30	165	0	0	0	0	0	0	0	0	135	194	0	1	270	0	0	765
7:30-7:45	180	0	5	0	0	0	0	0	0	206	277	0	2	295	0	0	965
7:45-8:00	179	0	3	0	0	0	0	0	0	251	403	0	8	297	0	0	1141
8:00-8:15	201	0	3	0	0	0	0	0	0	225	471	0	8	267	0	0	1175
8:15-8:30	220	0	10	0	0	0	0	0	0	197	389	0	11	272	0	0	1099
8:30-8:45	170	0	6	0	0	0	0	0	0	208	444	0	12	318	0	0	1158
8:45-9:00	161	0	4	0	0	0	0	0	0	208	534	0	10	225	0	0	1142
NOON PERIOD COUNTS																	
Period	**A**	**B**	**C**	**D**	**E**	**F**	**G**	**H**	**I**	**J**	**K**	**L**	**M**	**N**	**O**	**P**	**TOTAL**
11:00-11:15	0	0	0	0	0	0	0	0	0	0	0	0	0	0	0	0	0
11:15-11:30	0	0	0	0	0	0	0	0	0	0	0	0	0	0	0	0	0
11:30-11:45	0	0	0	0	0	0	0	0	0	0	0	0	0	0	0	0	0
11:45-12:00	0	0	0	0	0	0	0	0	0	0	0	0	0	0	0	0	0
12:00-12:15	0	0	0	0	0	0	0	0	0	0	0	0	0	0	0	0	0
12:15-12:30	0	0	0	0	0	0	0	0	0	0	0	0	0	0	0	0	0
12:30-12:45	0	0	0	0	0	0	0	0	0	0	0	0	0	0	0	0	0
12:45-13:00	0	0	0	0	0	0	0	0	0	0	0	0	0	0	0	0	0
PM PERIOD COUNTS																	
Period	**A**	**B**	**C**	**D**	**E**	**F**	**G**	**H**	**I**	**J**	**K**	**L**	**M**	**N**	**O**	**P**	**TOTAL**
16:00-16:15	267	0	14	0	0	0	0	0	0	259	168	0	7	243	0	0	958
16:15-16:30	288	0	14	0	0	0	0	0	0	282	215	0	3	170	0	0	972
16:30-16:45	341	0	8	0	0	0	0	0	0	272	162	0	9	226	0	0	1018
16:45-17:00	303	0	14	0	0	0	0	0	0	355	215	0	5	194	0	0	1086
17:00-17:15	461	0	16	0	0	0	0	0	0	333	200	0	3	246	0	0	1259
17:15-17:30	412	0	15	0	0	0	0	0	0	362	207	0	2	228	0	0	1226
17:30-17:45	322	0	12	0	0	0	0	0	0	357	210	0	2	233	0	0	1136
17:45-18:00	284	0	13	0	0	0	0	0	0	346	232	0	6	181	0	0	1062

SimTraffic Post-Processor | **Wasatch Boulevard Corridor LPRP**
Average Results from 10 Runs | **Existing Conditions**
Volume and Delay by Movement | **AM Peak Hour**

Intersection 1 **I-215/6200 South** **Signal**

Direction	Movement	Demand Volume (vph)	Served Volume (vph) Average	Served Volume (vph) Percent	Total Delay (sec/veh) Average	Total Delay (sec/veh) Std. Dev.	LOS
NB	Left Turn	165	134	81.0%	27.6	6.4	C
	Through						
	Right Turn	801	667	83.3%	47.3	3.8	D
	Subtotal	966	801	82.9%	44.2	2.7	D
SB	Left Turn	643	646	100.4%	29.7	2.6	C
	Through						
	Right Turn	68	66	96.3%	2.2	0.2	A
	Subtotal	711	711	100.0%	27.3	2.5	C
SE	Left Turn	199	154	77.4%	195.8	6.7	F
	Through	174	165	94.6%	43.7	5.2	D
	Right Turn						
	Subtotal	373	319	85.4%	116.7	6.9	F
NW	Left Turn	581	574	98.7%	115.0	26.7	F
	Through	116	117	100.7%	24.4	4.0	C
	Right Turn						
	Subtotal	697	690	99.0%	97.8	20.8	F
Total		2,747	2,521	91.8%	63.9	6.5	E

Intersection 2 **3000 East/6200 South** **Signal**

Direction	Movement	Demand Volume (vph)	Served Volume (vph) Average	Served Volume (vph) Percent	Total Delay (sec/veh) Average	Total Delay (sec/veh) Std. Dev.	LOS
NB	Left Turn	780	778	99.7%	44.7	16.7	D
	Through						
	Right Turn	21	22	106.2%	18.2	16.4	B
	Subtotal	801	800	99.9%	44.1	16.6	D
SB	Left Turn						
	Through						
	Right Turn						
	Subtotal						
EB	Left Turn						
	Through	879	808	91.9%	10.8	1.7	B
	Right Turn	739	676	91.4%	3.1	0.3	A
	Subtotal	1,618	1,483	91.7%	7.3	1.0	A
WB	Left Turn	29	27	93.4%	21.4	4.8	C
	Through	1,140	1,157	101.5%	35.4	8.5	D
	Right Turn						
	Subtotal	1,169	1,184	101.3%	35.1	8.4	D
Total		3,588	3,467	96.6%	25.5	5.5	C

SimTraffic Post-Processor | **Wasatch Boulevard Corridor LPRP**
Average Results from 10 Runs | **Existing Conditions**
Volume and Delay by Movement | **AM Peak Hour**

Intersection 3 **6200 South-Wasatch Boulevard/Millrock Drive-Wasatch Boulevard** **Signal**

Direction	Movement	Demand Volume (vph)	Served Volume (vph) Average	Served Volume (vph) Percent	Total Delay (sec/veh) Average	Total Delay (sec/veh) Std. Dev.	LOS
NB	Left Turn	91	91	99.8%	33.7	2.7	C
	Through	1,168	1,181	101.1%	15.9	2.9	B
	Right Turn	139	140	100.9%	2.2	0.4	A
	Subtotal	1,398	1,412	101.0%	15.7	2.4	B
SB	Left Turn	73	65	88.6%	28.6	2.5	C
	Through	369	339	91.8%	9.5	1.8	A
	Right Turn	320	297	92.8%	7.2	1.0	A
	Subtotal	762	701	91.9%	10.5	1.1	B
EB	Left Turn	10	9	94.0%	36.2	21.2	D
	Through	6	7	110.0%	34.4	7.4	C
	Right Turn	5	6	116.0%	4.9	4.0	A
	Subtotal	21	22	103.8%	27.5	6.2	C
WB	Left Turn	62	59	95.8%	33.2	5.4	C
	Through	25	26	105.6%	35.0	5.8	C
	Right Turn	60	65	107.5%	20.3	6.1	C
	Subtotal	147	150	102.2%	28.5	3.9	C
Total		2,328	2,284	98.1%	15.1	1.7	B

Intersection 4 **Wasatch Boulevard/Fort Union Boulevard-Big Cottonwood Canyon R** **Signal**

Direction	Movement	Demand Volume (vph)	Served Volume (vph) Average	Served Volume (vph) Percent	Total Delay (sec/veh) Average	Total Delay (sec/veh) Std. Dev.	LOS
NB	Left Turn	230	228	99.0%	11.9	1.2	B
	Through	1,483	1,507	101.6%	13.5	1.6	B
	Right Turn	27	27	98.5%	3.9	1.2	A
	Subtotal	1,740	1,761	101.2%	13.1	1.5	B
SB	Left Turn	40	36	90.5%	20.2	4.1	C
	Through	311	289	92.9%	7.9	1.4	A
	Right Turn	38	38	100.0%	3.3	0.7	A
	Subtotal	389	363	93.3%	8.8	0.9	A
EB	Left Turn	64	64	100.5%	34.0	4.9	C
	Through	28	31	112.1%	29.5	9.5	C
	Right Turn	65	69	106.6%	3.9	0.6	A
	Subtotal	157	165	105.1%	20.7	2.6	C
WB	Left Turn	11	8	71.8%	32.6	16.5	C
	Through	24	23	94.2%	33.3	4.5	C
	Right Turn	41	46	112.7%	3.0	0.6	A
	Subtotal	76	77	100.9%	14.7	3.3	B
Total		2,362	2,366	100.2%	13.1	1.3	B

SimTraffic Post-Processor | **Wasatch Boulevard Corridor LPRP**
Average Results from 10 Runs | **Existing Conditions**
Volume and Delay by Movement | **AM Peak Hour**

Intersection 5 **Wasatch Boulevard/Bengal Boulevard-Honeywood Cove Drive** **Signal**

Direction	Movement	Demand Volume (vph)	Served Volume (vph) Average	Served Volume (vph) Percent	Total Delay (sec/veh) Average	Total Delay (sec/veh) Std. Dev.	LOS
NB	Left Turn	8	9	106.3%	13.1	12.7	B
	Through	930	945	101.6%	11.1	1.3	B
	Right Turn	7	8	111.4%	6.7	5.5	A
	Subtotal	945	962	101.8%	11.1	1.2	B
SB	Left Turn	17	16	91.2%	16.4	11.7	B
	Through	266	248	93.3%	6.0	1.4	A
	Right Turn	105	100	95.3%	1.3	0.5	A
	Subtotal	388	364	93.8%	5.3	1.1	A
EB	Left Turn	411	387	94.1%	189.3	64.0	F
	Through	17	15	88.8%	159.3	54.1	F
	Right Turn	5	5	94.0%	135.4	104.0	F
	Subtotal	433	407	93.9%	187.8	63.4	F
WB	Left Turn	6	5	86.7%	29.4	25.2	C
	Through	29	28	95.2%	39.2	8.2	D
	Right Turn	68	67	99.0%	7.0	1.6	A
	Subtotal	103	100	97.2%	18.4	3.4	B
Total		1,869	1,832	98.0%	51.1	14.2	D

SimTraffic Post-Processor | **Wasatch Boulevard Corridor LPRP**
Average Results from 10 Runs | **Existing Conditions**
Volume and Delay by Movement | **PM Peak Hour**

Intersection 1 **I-215/6200 South** **Signal**

Direction	Movement	Demand Volume (vph)	Served Volume (vph) Average	Served Volume (vph) Percent	Total Delay (sec/veh) Average	Total Delay (sec/veh) Std. Dev.	LOS
NB	Left Turn	273	283	103.8%	31.9	4.3	C
	Through						
	Right Turn	403	404	100.1%	6.1	2.3	A
	Subtotal	676	687	101.6%	16.5	2.7	B
SB	Left Turn	1,198	1,197	99.9%	83.1	18.1	F
	Through						
	Right Turn	302	306	101.2%	6.9	2.3	A
	Subtotal	1,500	1,502	100.1%	67.1	14.5	E
SE	Left Turn	160	121	75.8%	247.1	13.2	F
	Through	226	229	101.2%	45.7	3.0	D
	Right Turn						
	Subtotal	386	350	90.7%	103.7	7.8	F
NW	Left Turn	995	877	88.2%	93.5	2.8	F
	Through	340	350	102.9%	19.2	2.6	B
	Right Turn						
	Subtotal	1,335	1,227	91.9%	71.5	2.1	E
Total		3,897	3,766	96.6%	61.9	6.5	E

Intersection 2 **3000 East/6200 South** **Signal**

Direction	Movement	Demand Volume (vph)	Served Volume (vph) Average	Served Volume (vph) Percent	Total Delay (sec/veh) Average	Total Delay (sec/veh) Std. Dev.	LOS
NB	Left Turn	1,498	1,388	92.7%	244.6	31.9	F
	Through						
	Right Turn	56	54	96.8%	75.1	27.5	E
	Subtotal	1,554	1,442	92.8%	238.1	31.7	F
SB	Left Turn						
	Through						
	Right Turn						
	Subtotal						
EB	Left Turn						
	Through	1,398	1,400	100.1%	23.4	2.6	C
	Right Turn	429	429	100.0%	3.5	0.7	A
	Subtotal	1,827	1,829	100.1%	18.6	2.1	B
WB	Left Turn	13	12	93.8%	55.4	20.1	E
	Through	888	883	99.4%	19.5	1.6	B
	Right Turn						
	Subtotal	901	895	99.3%	20.1	1.7	C
Total		4,282	4,166	97.3%	101.7	12.0	F

SimTraffic Post-Processor | **Wasatch Boulevard Corridor LPRP**
Average Results from 10 Runs | **Existing Conditions**
Volume and Delay by Movement | **PM Peak Hour**

Intersection 3 **6200 South-Wasatch Boulevard/Millrock Drive-Wasatch Boulevard** **Signal**

Direction	Movement	Demand Volume (vph)	Served Volume (vph) Average	Served Volume (vph) Percent	Total Delay (sec/veh) Average	Total Delay (sec/veh) Std. Dev.	LOS
NB	Left Turn	6	5	81.7%	51.1	35.5	D
	Through	617	619	100.3%	12.0	1.7	B
	Right Turn	93	91	97.7%	1.6	0.6	A
	Subtotal	716	715	99.8%	11.0	1.7	B
SB	Left Turn	72	71	98.5%	63.3	4.1	E
	Through	1,432	1,437	100.3%	15.5	2.9	B
	Right Turn	24	22	91.7%	8.0	4.4	A
	Subtotal	1,528	1,530	100.1%	17.6	2.7	B
EB	Left Turn	253	241	95.2%	54.5	12.7	D
	Through	22	20	91.4%	44.8	15.9	D
	Right Turn	164	167	101.8%	36.7	9.5	D
	Subtotal	439	428	97.5%	47.4	9.9	D
WB	Left Turn	187	187	99.7%	41.7	4.5	D
	Through	10	10	96.0%	54.4	25.0	D
	Right Turn	93	92	99.1%	14.8	4.2	B
	Subtotal	290	288	99.4%	33.9	4.9	C
Total		2,973	2,961	99.6%	22.7	2.3	C

Intersection 4 **Wasatch Boulevard/Fort Union Boulevard-Big Cottonwood Canyon R** **Signal**

Direction	Movement	Demand Volume (vph)	Served Volume (vph) Average	Served Volume (vph) Percent	Total Delay (sec/veh) Average	Total Delay (sec/veh) Std. Dev.	LOS
NB	Left Turn	170	174	102.5%	40.0	9.1	D
	Through	492	494	100.4%	15.8	2.4	B
	Right Turn	15	17	112.0%	3.2	2.1	A
	Subtotal	677	685	101.2%	21.8	3.2	C
SB	Left Turn	75	73	97.2%	19.8	4.1	B
	Through	1,556	1,549	99.5%	38.6	7.5	D
	Right Turn	105	106	100.8%	15.6	2.5	B
	Subtotal	1,736	1,728	99.5%	36.6	7.2	D
EB	Left Turn	98	95	96.6%	56.2	21.2	E
	Through	118	124	105.2%	50.5	20.5	D
	Right Turn	408	396	96.9%	52.5	26.1	D
	Subtotal	624	614	98.4%	53.0	23.9	D
WB	Left Turn	52	47	90.8%	52.9	17.1	D
	Through	40	38	94.8%	29.4	13.5	C
	Right Turn	97	98	100.5%	3.0	0.3	A
	Subtotal	189	183	96.6%	21.3	6.3	C
Total		3,226	3,209	99.5%	35.3	6.6	D

SimTraffic Post-Processor **Wasatch Boulevard Corridor LPRP**
Average Results from 10 Runs **Existing Conditions**
Volume and Delay by Movement **PM Peak Hour**

Intersection 5 **Wasatch Boulevard/Bengal Boulevard-Honeywood Cove Drive** **Signal**

Direction	Movement	Demand Volume (vph)	Served Volume (vph) Average	Served Volume (vph) Percent	Total Delay (sec/veh) Average	Total Delay (sec/veh) Std. Dev.	LOS
NB	Left Turn	11	12	112.7%	56.1	22.4	E
	Through	467	542	116.1%	4.6	0.6	A
	Right Turn	7	6	78.6%	2.4	2.8	A
	Subtotal	485	560	115.5%	6.1	1.5	A
SB	Left Turn	58	55	95.2%	60.4	45.0	E
	Through	1,425	1,426	100.1%	82.5	50.9	F
	Right Turn	493	473	95.9%	69.1	49.9	E
	Subtotal	1,976	1,955	98.9%	78.7	50.5	E
EB	Left Turn	177	173	97.6%	47.4	6.0	D
	Through	29	29	98.3%	40.5	17.3	D
	Right Turn	17	18	103.5%	28.9	19.9	C
	Subtotal	223	219	98.1%	45.6	5.2	D
WB	Left Turn	7	7	101.4%	58.8	37.2	E
	Through	13	12	89.2%	62.2	13.0	E
	Right Turn	23	24	105.2%	4.9	0.9	A
	Subtotal	43	43	99.8%	29.0	10.6	C
Total		2,727	2,776	101.8%	61.1	35.7	E

SimTraffic Post-Processor | **Wasatch Boulevard Corridor LPRP**
Average Results from 10 Runs | **2040 Background Conditions**
Volume and Delay by Movement | **AM Peak Hour**

Intersection 1 **I-215/6200 South** **Signal**

Direction	Movement	Demand Volume (vph)	Served Volume (vph) Average	Served Volume (vph) Percent	Total Delay (sec/veh) Average	Total Delay (sec/veh) Std. Dev.	LOS
NB	Left Turn	205	202	98.5%	68.1	14.8	E
	Through						
	Right Turn	940	960	102.1%	17.2	3.0	B
	Subtotal	1,145	1,162	101.5%	26.4	4.1	C
SB	Left Turn	705	440	62.4%	246.8	12.7	F
	Through						
	Right Turn	80	52	64.9%	30.9	11.6	C
	Subtotal	785	492	62.6%	225.9	14.8	F
SE	Left Turn	220	215	97.6%	64.8	11.2	E
	Through	220	211	95.7%	137.5	21.5	F
	Right Turn						
	Subtotal	440	425	96.7%	100.7	11.7	F
NW	Left Turn	740	649	87.7%	11.8	1.6	B
	Through	150	126	84.2%	22.2	4.5	C
	Right Turn						
	Subtotal	890	775	87.1%	13.5	1.5	B
Total		3,260	2,854	87.6%	68.4	4.0	E

Intersection 2 **3000 East/6200 South** **Signal**

Direction	Movement	Demand Volume (vph)	Served Volume (vph) Average	Served Volume (vph) Percent	Total Delay (sec/veh) Average	Total Delay (sec/veh) Std. Dev.	LOS
NB	Left Turn	955	694	72.6%	145.8	4.8	F
	Through						
	Right Turn	25	18	72.4%	129.6	14.5	F
	Subtotal	980	712	72.6%	145.4	4.9	F
SB	Left Turn						
	Through						
	Right Turn						
	Subtotal						
EB	Left Turn						
	Through	960	840	87.5%	13.6	1.2	B
	Right Turn	905	773	85.4%	3.7	0.2	A
	Subtotal	1,865	1,613	86.5%	9.0	0.9	A
WB	Left Turn	30	28	94.7%	25.7	9.7	C
	Through	1,255	1,255	100.0%	13.9	1.6	B
	Right Turn						
	Subtotal	1,285	1,284	99.9%	14.2	1.6	B
Total		4,130	3,609	87.4%	38.3	1.1	D

SimTraffic Post-Processor | **Wasatch Boulevard Corridor LPRP**
Average Results from 10 Runs | **2040 Background Conditions**
Volume and Delay by Movement | **AM Peak Hour**

Intersection 3 **6200 South-Wasatch Boulevard/Millrock Drive-Wasatch Boulevard** **Signal**

Direction	Movement	Demand Volume (vph)	Served Volume (vph) Average	Served Volume (vph) Percent	Total Delay (sec/veh) Average	Total Delay (sec/veh) Std. Dev.	LOS
NB	Left Turn	120	113	93.8%	74.0	13.7	E
	Through	1,310	1,316	100.4%	12.9	4.2	B
	Right Turn	160	160	100.1%	1.7	0.4	A
	Subtotal	1,590	1,588	99.9%	16.2	5.0	B
SB	Left Turn	75	60	79.7%	51.6	14.3	D
	Through	440	390	88.7%	10.2	3.1	B
	Right Turn	320	279	87.2%	8.9	2.9	A
	Subtotal	835	729	87.3%	13.3	3.1	B
EB	Left Turn	10	9	92.0%	72.8	34.3	E
	Through	10	10	104.0%	60.1	31.8	E
	Right Turn	10	11	108.0%	7.4	6.9	A
	Subtotal	30	30	101.3%	45.4	12.4	D
WB	Left Turn	75	77	103.1%	51.2	13.0	D
	Through	25	24	97.6%	66.7	23.5	E
	Right Turn	60	61	101.5%	38.8	13.7	D
	Subtotal	160	163	101.6%	49.2	10.5	D
Total		2,615	2,510	96.0%	17.7	4.4	B

Intersection 4 **Wasatch Boulevard/Fort Union Boulevard-Big Cottonwood Canyon R** **Signal**

Direction	Movement	Demand Volume (vph)	Served Volume (vph) Average	Served Volume (vph) Percent	Total Delay (sec/veh) Average	Total Delay (sec/veh) Std. Dev.	LOS
NB	Left Turn	270	272	100.8%	15.3	3.3	B
	Through	1,480	1,500	101.4%	12.9	1.2	B
	Right Turn	50	52	103.0%	3.5	0.7	A
	Subtotal	1,800	1,824	101.3%	13.0	1.2	B
SB	Left Turn	65	60	91.7%	41.0	9.5	D
	Through	370	338	91.4%	7.1	1.7	A
	Right Turn	40	38	95.5%	3.1	2.2	A
	Subtotal	475	436	91.7%	11.2	1.9	B
EB	Left Turn	70	71	101.3%	58.4	8.2	E
	Through	45	47	104.0%	52.9	9.7	D
	Right Turn	80	81	100.8%	5.6	0.9	A
	Subtotal	195	198	101.7%	34.9	5.8	C
WB	Left Turn	20	19	96.0%	77.9	25.7	E
	Through	40	39	97.5%	55.5	11.8	E
	Right Turn	65	67	103.4%	3.1	0.5	A
	Subtotal	125	125	100.3%	30.2	8.1	C
Total		2,595	2,584	99.6%	15.3	1.4	B

SimTraffic Post-Processor | **Wasatch Boulevard Corridor LPRP**
Average Results from 10 Runs | **2040 Background Conditions**
Volume and Delay by Movement | **AM Peak Hour**

Intersection 5 **Wasatch Boulevard/Bengal Boulevard-Honeywood Cove Drive** **Signal**

Direction	Movement	Demand Volume (vph)	Served Volume (vph) Average	Served Volume (vph) Percent	Total Delay (sec/veh) Average	Total Delay (sec/veh) Std. Dev.	LOS
NB	Left Turn	25	25	98.8%	45.4	14.4	D
	Through	1,105	1,100	99.5%	43.9	5.1	D
	Right Turn	10	11	114.0%	42.0	25.0	D
	Subtotal	1,140	1,136	99.6%	43.9	5.2	D
SB	Left Turn	20	19	95.5%	93.2	23.3	F
	Through	320	296	92.5%	28.5	3.5	C
	Right Turn	135	127	93.9%	3.3	1.0	A
	Subtotal	475	442	93.1%	24.1	2.5	C
EB	Left Turn	565	570	100.9%	49.8	9.4	D
	Through	25	23	92.0%	42.2	14.8	D
	Right Turn	15	17	110.7%	22.5	19.5	C
	Subtotal	605	610	100.8%	48.9	9.1	D
WB	Left Turn	10	10	98.0%	48.2	10.8	D
	Through	50	49	98.4%	70.2	18.4	E
	Right Turn	70	69	97.9%	14.2	4.3	B
	Subtotal	130	128	98.1%	41.8	15.0	D
Total		2,350	2,315	98.5%	41.7	4.8	D

SimTraffic Post-Processor | **Wasatch Boulevard Corridor LPRP**
Average Results from 10 Runs | **2040 Background Conditions**
Volume and Delay by Movement | **PM Peak Hour**

Intersection 1 **I-215/6200 South** **Signal**

Direction	Movement	Demand Volume (vph)	Served Volume (vph) Average	Served Volume (vph) Percent	Total Delay (sec/veh) Average	Total Delay (sec/veh) Std. Dev.	LOS
NB	Left Turn	335	343	102.3%	45.7	5.6	D
	Through						
	Right Turn	665	673	101.2%	14.4	3.9	B
	Subtotal	1,000	1,016	101.6%	24.7	2.6	C
SB	Left Turn	1,315	1,241	94.4%	224.4	27.7	F
	Through						
	Right Turn	345	344	99.7%	16.6	10.0	B
	Subtotal	1,660	1,585	95.5%	181.2	25.0	F
SE	Left Turn	175	169	96.8%	50.5	3.8	D
	Through	285	304	106.8%	85.4	27.8	F
	Right Turn						
	Subtotal	460	474	103.0%	73.8	19.2	E
NW	Left Turn	1,215	1,141	93.9%	53.8	2.4	D
	Through	435	1,457	334.9%	15.5	3.4	B
	Right Turn						
	Subtotal	1,650	2,598	157.4%	32.8	1.9	C
Total		4,770	5,672	118.9%	76.6	6.2	E

Intersection 2 **3000 East/6200 South** **Signal**

Direction	Movement	Demand Volume (vph)	Served Volume (vph) Average	Served Volume (vph) Percent	Total Delay (sec/veh) Average	Total Delay (sec/veh) Std. Dev.	LOS
NB	Left Turn	1,815	1,616	89.0%	300.8	27.8	F
	Through						
	Right Turn	60	57	94.7%	244.9	50.1	F
	Subtotal	1,875	1,673	89.2%	298.7	28.4	F
SB	Left Turn						
	Through						
	Right Turn						
	Subtotal						
EB	Left Turn						
	Through	1,550	1,515	97.7%	16.7	1.4	B
	Right Turn	530	514	96.9%	3.5	0.6	A
	Subtotal	2,080	2,028	97.5%	13.4	1.1	B
WB	Left Turn	15	14	93.3%	65.2	32.6	E
	Through	960	940	97.9%	19.6	2.9	B
	Right Turn						
	Subtotal	975	954	97.8%	20.5	3.3	C
Total		4,930	4,655	94.4%	118.0	11.4	F

SimTraffic Post-Processor | **Wasatch Boulevard Corridor LPRP**
Average Results from 10 Runs | **2040 Background Conditions**
Volume and Delay by Movement | **PM Peak Hour**

Intersection 3 **6200 South-Wasatch Boulevard/Millrock Drive-Wasatch Boulevard** **Signal**

Direction	Movement	Demand Volume (vph)	Served Volume (vph) Average	Served Volume (vph) Percent	Total Delay (sec/veh) Average	Total Delay (sec/veh) Std. Dev.	LOS
NB	Left Turn	10	9	90.0%	65.9	36.0	E
	Through	730	773	105.9%	12.4	1.6	B
	Right Turn	110	100	91.3%	1.5	0.6	A
	Subtotal	850	883	103.8%	11.8	1.7	B
SB	Left Turn	75	70	93.7%	81.9	9.6	F
	Through	1,610	1,580	98.1%	5.1	1.0	A
	Right Turn	25	23	91.6%	1.7	1.5	A
	Subtotal	1,710	1,673	97.9%	8.5	1.6	A
EB	Left Turn	255	234	91.8%	149.8	33.0	F
	Through	25	24	96.8%	183.8	41.7	F
	Right Turn	210	196	93.4%	193.7	24.4	F
	Subtotal	490	455	92.8%	171.8	29.1	F
WB	Left Turn	215	215	100.0%	60.7	8.5	E
	Through	10	10	101.0%	71.0	43.1	E
	Right Turn	95	93	97.9%	2.7	0.6	A
	Subtotal	320	318	99.4%	44.9	5.4	D
Total		3,370	3,328	98.8%	34.9	2.0	C

Intersection 4 **Wasatch Boulevard/Fort Union Boulevard-Big Cottonwood Canyon R** **Signal**

Direction	Movement	Demand Volume (vph)	Served Volume (vph) Average	Served Volume (vph) Percent	Total Delay (sec/veh) Average	Total Delay (sec/veh) Std. Dev.	LOS
NB	Left Turn	205	205	99.9%	150.1	102.0	F
	Through	585	589	100.7%	12.1	2.6	B
	Right Turn	30	27	91.0%	3.5	2.5	A
	Subtotal	820	821	100.1%	47.5	27.3	D
SB	Left Turn	125	116	92.8%	39.7	9.6	D
	Through	1,865	1,820	97.6%	49.2	13.3	D
	Right Turn	110	105	95.6%	22.9	7.7	C
	Subtotal	2,100	2,041	97.2%	47.3	12.7	D
EB	Left Turn	100	75	74.7%	191.7	27.2	F
	Through	185	151	81.4%	191.2	10.9	F
	Right Turn	460	373	81.1%	216.9	10.6	F
	Subtotal	745	598	80.3%	207.4	8.5	F
WB	Left Turn	95	90	94.6%	189.0	127.5	F
	Through	65	66	101.1%	99.4	86.3	F
	Right Turn	150	154	102.5%	17.4	29.1	B
	Subtotal	310	309	99.8%	89.6	72.9	F
Total		3,975	3,770	94.8%	76.2	10.1	E

SimTraffic Post-Processor | **Wasatch Boulevard Corridor LPRP**
Average Results from 10 Runs | **2040 Background Conditions**
Volume and Delay by Movement | **PM Peak Hour**

Intersection 5 **Wasatch Boulevard/Bengal Boulevard-Honeywood Cove Drive** **Signal**

Direction	Movement	Demand Volume (vph)	Served Volume (vph) Average	Served Volume (vph) Percent	Total Delay (sec/veh) Average	Total Delay (sec/veh) Std. Dev.	LOS
NB	Left Turn	35	33	92.9%	185.6	152.2	F
	Through	555	557	100.4%	9.5	2.1	A
	Right Turn	10	10	101.0%	7.2	11.8	A
	Subtotal	600	600	100.0%	21.6	15.3	C
SB	Left Turn	60	53	88.7%	115.0	22.1	F
	Through	1,695	1,562	92.1%	137.0	23.4	F
	Right Turn	670	606	90.4%	133.7	24.9	F
	Subtotal	2,425	2,220	91.6%	135.6	23.7	F
EB	Left Turn	225	232	102.9%	60.5	6.8	E
	Through	45	42	92.7%	60.0	10.1	E
	Right Turn	50	50	100.4%	46.5	11.2	D
	Subtotal	320	323	101.1%	58.4	6.5	E
WB	Left Turn	10	9	86.0%	64.3	61.2	E
	Through	20	22	107.5%	82.9	30.9	F
	Right Turn	25	26	102.4%	5.6	1.7	A
	Subtotal	55	56	101.3%	45.8	28.2	D
Total		3,400	3,199	94.1%	107.1	17.2	F

SimTraffic Post-Processor | **Wasatch Boulevard Corridor LPRP**
Average Results from 10 Runs | **2040 Plus Project Conditions**
Volume and Delay by Movement | **AM Peak Hour**

Intersection 1 **I-215/6200 South** **Signal**

Direction	Movement	Demand Volume (vph)	Served Volume (vph) Average	Served Volume (vph) Percent	Total Delay (sec/veh) Average	Total Delay (sec/veh) Std. Dev.	LOS
NB	Left Turn	205	153	74.8%	47.2	6.6	D
	Through						
	Right Turn	1,345	988	73.4%	25.8	0.4	C
	Subtotal	1,550	1,141	73.6%	28.6	1.3	C
SB	Left Turn	1,109	684	61.6%	272.9	6.1	F
	Through						
	Right Turn	80	49	60.6%	23.0	11.2	C
	Subtotal	1,189	732	61.6%	259.2	7.1	F
SE	Left Turn	220	175	79.7%	45.7	5.6	D
	Through	422	327	77.6%	141.4	3.7	F
	Right Turn						
	Subtotal	642	503	78.3%	106.1	3.2	F
NW	Left Turn	1,008	732	72.6%	32.7	3.1	C
	Through	285	209	73.4%	22.0	3.7	C
	Right Turn						
	Subtotal	1,293	941	72.8%	30.4	2.5	C
Total		4,674	3,317	71.0%	91.3	2.1	F

Intersection 2 **3000 East/6200 South** **Signal**

Direction	Movement	Demand Volume (vph)	Served Volume (vph) Average	Served Volume (vph) Percent	Total Delay (sec/veh) Average	Total Delay (sec/veh) Std. Dev.	LOS
NB	Left Turn	955	437	45.7%	224.5	5.9	F
	Through						
	Right Turn	85	40	47.1%	195.7	26.9	F
	Subtotal	1,040	477	45.9%	222.4	4.8	F
SB	Left Turn						
	Through						
	Right Turn						
	Subtotal						
EB	Left Turn						
	Through	1,971	1,386	70.3%	6.9	0.6	A
	Right Turn	905	622	68.7%	3.3	0.4	A
	Subtotal	2,876	2,008	69.8%	5.8	0.4	A
WB	Left Turn	70	60	85.6%	46.0	9.5	D
	Through	1,926	1,657	86.0%	18.9	1.1	B
	Right Turn						
	Subtotal	1,996	1,717	86.0%	19.8	1.0	B
Total		5,912	4,201	71.1%	36.3	0.7	D

SimTraffic Post-Processor | **Wasatch Boulevard Corridor LPRP**
Average Results from 10 Runs | **2040 Plus Project Conditions**
Volume and Delay by Movement | **AM Peak Hour**

Intersection 3 **6200 South-Wasatch Boulevard/Millrock Drive-Wasatch Boulevard** **Signal**

Direction	Movement	Demand Volume (vph)	Served Volume (vph) Average	Served Volume (vph) Percent	Total Delay (sec/veh) Average	Total Delay (sec/veh) Std. Dev.	LOS
NB	Left Turn	125	108	86.4%	71.2	7.0	E
	Through	1,960	1,657	84.6%	36.5	2.9	D
	Right Turn	286	239	83.5%	24.3	2.4	C
	Subtotal	2,371	2,004	84.5%	36.8	2.5	D
SB	Left Turn	182	127	69.6%	86.7	23.1	F
	Through	1,404	981	69.9%	16.2	1.6	B
	Right Turn	320	212	66.3%	6.1	0.9	A
	Subtotal	1,906	1,320	69.3%	20.9	3.0	C
EB	Left Turn	10	9	86.0%	79.8	23.1	E
	Through	10	11	107.0%	83.5	41.4	F
	Right Turn	10	10	98.0%	14.0	10.2	B
	Subtotal	30	29	97.0%	54.6	15.3	D
WB	Left Turn	215	217	101.0%	60.6	5.8	E
	Through	25	26	105.6%	49.5	21.3	D
	Right Turn	131	135	103.2%	1.3	0.3	A
	Subtotal	371	379	102.1%	38.3	5.5	D
Total		4,678	3,732	79.8%	31.3	1.7	C

Intersection 4 **Wasatch Boulevard/Fort Union Boulevard-Big Cottonwood Canyon R** **Signal**

Direction	Movement	Demand Volume (vph)	Served Volume (vph) Average	Served Volume (vph) Percent	Total Delay (sec/veh) Average	Total Delay (sec/veh) Std. Dev.	LOS
NB	Left Turn	270	193	71.6%	88.9	8.5	F
	Through	1,884	1,409	74.8%	116.6	10.9	F
	Right Turn	50	37	74.4%	52.9	11.0	D
	Subtotal	2,204	1,640	74.4%	112.0	10.4	F
SB	Left Turn	137	112	81.7%	48.9	8.9	D
	Through	679	578	85.2%	18.8	2.8	B
	Right Turn	246	216	87.7%	5.7	1.5	A
	Subtotal	1,062	906	85.3%	19.3	2.8	B
EB	Left Turn	373	371	99.5%	55.4	6.0	E
	Through	45	44	98.7%	34.5	7.3	C
	Right Turn	80	79	98.1%	5.3	2.4	A
	Subtotal	498	494	99.2%	45.3	3.5	D
WB	Left Turn	20	20	99.5%	65.8	25.1	E
	Through	40	36	90.0%	68.2	12.6	E
	Right Turn	166	167	100.5%	2.5	0.5	A
	Subtotal	226	223	98.5%	19.1	2.8	B
Total		3,990	3,262	81.8%	69.1	2.2	E

Intersection 5 **Wasatch Boulevard/Bengal Boulevard-Honeywood Cove Drive** **Signal**

Direction	Movement	Demand Volume (vph)	Served Volume (vph) Average	Served Volume (vph) Percent	Total Delay (sec/veh) Average	Total Delay (sec/veh) Std. Dev.	LOS
NB	Left Turn	25	20	78.4%	65.6	13.4	E
	Through	1,408	1,052	74.7%	67.7	10.5	E
	Right Turn	10	8	84.0%	54.4	28.8	D
	Subtotal	1,443	1,080	74.8%	67.6	10.4	E
SB	Left Turn	20	16	80.5%	62.0	26.4	E
	Through	522	444	85.1%	26.5	2.2	C
	Right Turn	202	178	88.0%	6.0	1.3	A
	Subtotal	744	638	85.8%	22.0	2.1	C
EB	Left Turn	666	650	97.7%	100.7	43.5	F
	Through	25	23	92.8%	85.3	30.7	F
	Right Turn	15	17	110.7%	81.9	43.6	F
	Subtotal	706	690	97.8%	99.9	43.1	F
WB	Left Turn	10	10	98.0%	293.0	223.0	F
	Through	50	44	87.6%	389.5	243.8	F
	Right Turn	70	63	89.6%	151.1	167.1	F
	Subtotal	130	116	89.5%	260.6	197.7	F
Total		3,023	2,525	83.5%	70.0	19.2	E

Intersection 45 **Wasatch Boulevard/Access 3** **Side-street Stop**

Direction	Movement	Demand Volume (vph)	Served Volume (vph) Average	Served Volume (vph) Percent	Total Delay (sec/veh) Average	Total Delay (sec/veh) Std. Dev.	LOS
NB	Left Turn						
	Through	330	256	77.7%	4.4	0.8	A
	Right Turn	148	122	82.7%	2.8	0.8	A
	Subtotal	478	379	79.2%	3.9	0.7	A
SB	Left Turn	28	25	88.9%	6.9	5.1	A
	Through	273	279	102.2%	2.1	0.8	A
	Right Turn						
	Subtotal	301	304	101.0%	2.5	0.9	A
EB	Left Turn						
	Through						
	Right Turn						
	Subtotal						
NW	Left Turn	98	100	102.1%	40.3	3.8	E
	Through						
	Right Turn	19	19	97.4%	3.8	1.2	A
	Subtotal	117	119	101.4%	34.8	3.2	D
Total		896	801	89.4%	8.3	0.9	A

Intersection 34 **Wasatch Boulevard/Access 1** **Signal**

SimTraffic Post-Processor | **Wasatch Boulevard Corridor LPRP**
Average Results from 10 Runs | **2040 Plus Project Conditions**
Volume and Delay by Movement | **AM Peak Hour**

Direction	Movement	Demand Volume (vph)	Served Volume (vph) Average	Served Volume (vph) Percent	Total Delay (sec/veh) Average	Total Delay (sec/veh) Std. Dev.	LOS
NW	Left Turn						
	Through	2,049	1,685	82.2%	36.6	10.4	D
	Right Turn	202	164	81.4%	18.3	9.2	B
	Subtotal	2,251	1,850	82.2%	34.9	10.2	C
SE	Left Turn	606	449	74.1%	67.3	13.5	E
	Through	1,023	753	73.6%	7.1	0.7	A
	Right Turn						
	Subtotal	1,629	1,203	73.8%	29.6	4.7	C
EB	Left Turn						
	Through						
	Right Turn						
	Subtotal						
WB	Left Turn	242	238	98.2%	83.5	22.3	F
	Through						
	Right Turn	322	318	98.9%	42.7	7.8	D
	Subtotal	564	556	98.6%	60.1	10.8	E
Total		4,444	3,608	81.2%	36.9	7.8	D

Intersection 51 | **Wasatch Boulevard/Access 2** | **Signal**

Direction	Movement	Demand Volume (vph)	Served Volume (vph) Average	Served Volume (vph) Percent	Total Delay (sec/veh) Average	Total Delay (sec/veh) Std. Dev.	LOS
NW	Left Turn						
	Through	2,100	1,687	80.3%	87.1	3.6	F
	Right Turn	323	248	76.7%	65.5	3.9	E
	Subtotal	2,423	1,935	79.8%	84.4	3.5	F
SE	Left Turn	471	372	79.0%	44.0	3.6	D
	Through	794	621	78.1%	2.9	0.3	A
	Right Turn						
	Subtotal	1,265	992	78.5%	18.4	2.1	B
EB	Left Turn						
	Through						
	Right Turn						
	Subtotal						
WB	Left Turn	268	267	99.7%	63.2	4.6	E
	Through						
	Right Turn	157	156	99.1%	4.2	1.3	A
	Subtotal	425	423	99.5%	42.7	5.3	D
Total		4,113	3,350	81.4%	60.0	1.6	E

Intersection 35 | **Wasatch Blvd/New Access** | **Side-street Stop**

Direction	Movement	Demand Volume (vph)	Served Volume (vph) Average	Served Volume (vph) Percent	Total Delay (sec/veh) Average	Total Delay (sec/veh) Std. Dev.	LOS

NB	Left Turn						
	Through						
	Right Turn						
	Subtotal						
SB	Left Turn						
	Through						
	Right Turn						
	Subtotal						
EB	Left Turn						
	Through						
	Right Turn						
	Subtotal						
WB	Left Turn						
	Through						
	Right Turn	237	234	98.6%	95.6	81.4	F
	Subtotal	237	234	98.6%	95.6	81.4	F
Total		237	234	98.6%	95.6	81.4	F

SimTraffic Post-Processor | **Wasatch Boulevard Corridor LPRP**
Average Results from 10 Runs | **2040 Plus Project Conditions**
Volume and Delay by Movement | **PM Peak Hour**

Intersection 1 **I-215/6200 South** **Signal**

Direction	Movement	Demand Volume (vph)	Served Volume (vph) Average	Served Volume (vph) Percent	Total Delay (sec/veh) Average	Total Delay (sec/veh) Std. Dev.	LOS
NB	Left Turn	335	264	78.7%	207.9	4.7	F
	Through						
	Right Turn	822	711	86.4%	5.6	1.8	A
	Subtotal	1,157	974	84.2%	68.6	6.7	E
SB	Left Turn	1,657	561	33.9%	293.6	11.1	F
	Through						
	Right Turn	345	120	34.6%	22.6	8.1	C
	Subtotal	2,002	680	34.0%	246.3	14.7	F
SE	Left Turn	175	128	73.0%	89.2	9.1	F
	Through	456	341	74.8%	129.2	6.0	F
	Right Turn						
	Subtotal	631	469	74.3%	117.9	6.2	F
NW	Left Turn	1,008	522	51.8%	14.9	1.6	B
	Through	1,425	748	52.5%	21.0	2.8	C
	Right Turn						
	Subtotal	2,433	1,270	52.2%	18.6	1.8	B
Total		6,223	3,394	54.5%	95.5	2.3	F

Intersection 2 **3000 East/6200 South** **Signal**

Direction	Movement	Demand Volume (vph)	Served Volume (vph) Average	Served Volume (vph) Percent	Total Delay (sec/veh) Average	Total Delay (sec/veh) Std. Dev.	LOS
NB	Left Turn	1,815	618	34.1%	162.7	7.0	F
	Through						
	Right Turn	113	38	33.7%	175.1	32.4	F
	Subtotal	1,928	656	34.0%	163.3	5.9	F
SB	Left Turn						
	Through						
	Right Turn						
	Subtotal						
EB	Left Turn						
	Through	2,405	1,322	55.0%	18.3	12.0	B
	Right Turn	530	292	55.0%	1.8	0.2	A
	Subtotal	2,935	1,613	55.0%	15.3	9.7	B
WB	Left Turn	93	66	71.0%	63.9	36.7	E
	Through	2,264	1,470	64.9%	35.2	1.1	D
	Right Turn						
	Subtotal	2,357	1,536	65.2%	36.6	2.4	D
Total		7,220	3,805	52.7%	49.4	4.8	D

SimTraffic Post-Processor | **Wasatch Boulevard Corridor LPRP**
Average Results from 10 Runs | **2040 Plus Project Conditions**
Volume and Delay by Movement | **PM Peak Hour**

Intersection 3 **6200 South-Wasatch Boulevard/Millrock Drive-Wasatch Boulevard** **Signal**

Direction	Movement	Demand Volume (vph)	Served Volume (vph) Average	Served Volume (vph) Percent	Total Delay (sec/veh) Average	Total Delay (sec/veh) Std. Dev.	LOS
NB	Left Turn	10	6	57.0%	142.8	110.4	F
	Through	1,974	1,163	58.9%	158.7	13.3	F
	Right Turn	290	161	55.4%	148.0	14.1	F
	Subtotal	2,274	1,329	58.5%	157.5	12.6	F
SB	Left Turn	166	91	54.8%	102.2	22.4	F
	Through	2,477	1,315	53.1%	85.2	32.5	F
	Right Turn	25	14	54.4%	50.5	30.7	D
	Subtotal	2,668	1,420	53.2%	86.2	30.9	F
EB	Left Turn	255	254	99.5%	53.4	22.1	D
	Through	25	26	103.6%	82.7	39.9	F
	Right Turn	220	215	97.5%	74.3	30.7	E
	Subtotal	500	494	98.8%	63.7	26.3	E
WB	Left Turn	368	331	89.8%	219.1	104.9	F
	Through	10	14	144.0%	181.9	116.9	F
	Right Turn	233	227	97.6%	1.8	0.6	A
	Subtotal	611	572	93.6%	121.4	51.4	F
Total		6,053	3,815	63.0%	112.5	20.3	F

Intersection 4 **Wasatch Boulevard/Fort Union Boulevard-Big Cottonwood Canyon R** **Signal**

Direction	Movement	Demand Volume (vph)	Served Volume (vph) Average	Served Volume (vph) Percent	Total Delay (sec/veh) Average	Total Delay (sec/veh) Std. Dev.	LOS
NB	Left Turn	205	169	82.2%	317.9	65.0	F
	Through	938	811	86.4%	160.1	96.1	F
	Right Turn	30	25	82.3%	73.1	59.1	E
	Subtotal	1,173	1,004	85.6%	191.1	79.2	F
SB	Left Turn	255	150	58.7%	90.9	11.8	F
	Through	2,388	1,367	57.2%	141.2	9.6	F
	Right Turn	501	293	58.5%	82.8	5.2	F
	Subtotal	3,144	1,810	57.6%	128.5	8.7	F
EB	Left Turn	357	218	60.9%	461.4	101.9	F
	Through	185	115	62.4%	90.1	18.3	F
	Right Turn	460	310	67.3%	105.3	20.7	F
	Subtotal	1,002	643	64.1%	230.1	53.3	F
WB	Left Turn	95	76	79.7%	427.2	168.8	F
	Through	65	54	83.2%	318.9	150.7	F
	Right Turn	241	200	83.1%	209.3	106.8	F
	Subtotal	401	330	82.3%	287.0	122.1	F
Total		5,720	3,786	66.2%	171.1	19.3	F

SimTraffic Post-Processor | **Wasatch Boulevard Corridor LPRP**
Average Results from 10 Runs | **2040 Plus Project Conditions**
Volume and Delay by Movement | **PM Peak Hour**

Intersection 5 **Wasatch Boulevard/Bengal Boulevard-Honeywood Cove Drive** **Signal**

Direction	Movement	Demand Volume (vph)	Served Volume (vph) Average	Served Volume (vph) Percent	Total Delay (sec/veh) Average	Total Delay (sec/veh) Std. Dev.	LOS
NB	Left Turn	35	32	90.9%	154.0	110.6	F
	Through	812	806	99.2%	17.1	21.4	B
	Right Turn	10	12	119.0%	8.4	13.2	A
	Subtotal	857	850	99.1%	22.6	20.4	C
SB	Left Turn	60	30	50.5%	212.0	48.2	F
	Through	2,088	1,138	54.5%	216.6	13.2	F
	Right Turn	800	420	52.4%	197.6	13.3	F
	Subtotal	2,948	1,588	53.9%	211.8	13.3	F
EB	Left Turn	311	299	96.1%	77.3	51.4	E
	Through	45	44	98.0%	38.4	17.9	D
	Right Turn	50	54	108.8%	15.4	31.6	B
	Subtotal	406	398	97.9%	63.9	44.8	E
WB	Left Turn	10	10	100.0%	54.0	34.2	D
	Through	20	23	113.0%	62.1	27.4	E
	Right Turn	25	26	103.2%	11.9	13.8	B
	Subtotal	55	58	106.2%	37.9	23.3	D
Total		4,266	2,893	67.8%	133.6	16.4	F

Intersection 45 **Wasatch Boulevard/Access 3** **Side-street Stop**

Direction	Movement	Demand Volume (vph)	Served Volume (vph) Average	Served Volume (vph) Percent	Total Delay (sec/veh) Average	Total Delay (sec/veh) Std. Dev.	LOS
NB	Left Turn						
	Through	356	206	57.8%	6.7	2.0	A
	Right Turn	125	73	58.2%	3.7	1.1	A
	Subtotal	481	279	57.9%	5.9	1.6	A
SB	Left Turn	24	21	86.7%	10.8	5.0	B
	Through	421	408	96.8%	3.8	1.0	A
	Right Turn						
	Subtotal	445	428	96.3%	4.1	0.9	A
EB	Left Turn						
	Through						
	Right Turn						
	Subtotal						
NW	Left Turn	190	187	98.2%	39.4	3.1	E
	Through						
	Right Turn	36	35	98.3%	3.3	1.1	A
	Subtotal	226	222	98.2%	34.1	3.5	D
Total		1,152	929	80.6%	12.3	2.0	B

Intersection 34 **Wasatch Boulevard/Access 1** **Signal**

SimTraffic Post-Processor **Wasatch Boulevard Corridor LPRP**
Average Results from 10 Runs **2040 Plus Project Conditions**
Volume and Delay by Movement **PM Peak Hour**

Direction	Movement	Demand Volume (vph)	Served Volume (vph) Average	Served Volume (vph) Percent	Total Delay (sec/veh) Average	Total Delay (sec/veh) Std. Dev.	LOS
NW	Left Turn						
	Through	1,649	913	55.4%	177.4	11.0	F
	Right Turn	171	87	50.8%	141.9	26.8	F
	Subtotal	1,820	1,000	54.9%	173.9	12.2	F
SE	Left Turn	513	304	59.3%	95.1	13.6	F
	Through	2,552	1,471	57.6%	169.3	29.8	F
	Right Turn						
	Subtotal	3,065	1,775	57.9%	157.1	27.7	F
EB	Left Turn						
	Through						
	Right Turn						
	Subtotal						
WB	Left Turn	469	338	72.0%	276.6	115.0	F
	Through						
	Right Turn	625	423	67.7%	331.6	47.3	F
	Subtotal	1,094	761	69.5%	299.2	53.3	F
Total		5,979	3,535	59.1%	183.8	15.0	F

Intersection 51 **Wasatch Boulevard/Access 2** **Signal**

Direction	Movement	Demand Volume (vph)	Served Volume (vph) Average	Served Volume (vph) Percent	Total Delay (sec/veh) Average	Total Delay (sec/veh) Std. Dev.	LOS
NW	Left Turn						
	Through	1,262	968	76.7%	132.5	24.3	F
	Right Turn	274	197	71.9%	48.3	6.9	D
	Subtotal	1,536	1,165	75.8%	118.7	22.6	F
SE	Left Turn	398	223	56.0%	85.1	7.2	F
	Through	2,623	1,466	55.9%	124.0	8.7	F
	Right Turn						
	Subtotal	3,021	1,689	55.9%	119.2	8.3	F
EB	Left Turn						
	Through						
	Right Turn						
	Subtotal						
WB	Left Turn	521	365	70.0%	418.3	32.5	F
	Through						
	Right Turn	303	209	68.8%	324.3	49.8	F
	Subtotal	824	573	69.6%	383.9	38.7	F
Total		5,381	3,427	63.7%	159.1	9.8	F

Intersection 35 **Wasatch Blvd/New Access** **Side-street Stop**

Direction	Movement	Demand Volume (vph)	Served Volume (vph) Average	Served Volume (vph) Percent	Total Delay (sec/veh) Average	Total Delay (sec/veh) Std. Dev.	LOS

NB	Left Turn						
	Through						
	Right Turn						
	Subtotal						
SB	Left Turn						
	Through						
	Right Turn						
	Subtotal						
EB	Left Turn						
	Through						
	Right Turn						
	Subtotal						
WB	Left Turn						
	Through						
	Right Turn	460	70	15.1%	689.2	162.1	F
	Subtotal	460	70	15.1%	599.2	255.2	F
Total		460	70	15.1%	599.2	255.2	F

EXHIBIT D: STEERING COMMITTEE MEETING MINUTES

Wasatch Boulevard Corridor Master Plan

Meeting Minutes

November 3, 2015 1-2:30 PM

Cottonwood Heights City Hall

Attendees	
Glen Goins	Cottonwood Heights City
Brian Berndt	Cottonwood Heights City
Peri Kinder	Cottonwood Heights City
Mike Johnson	Cottonwood Heights City
Zack	Cottonwood Heights City
Doug Shelby	Property owner
Val Halford	WFRC
Callie New	WFRC
Patrick Cowley	UDOT Region 2
Levi Roberts	UTA
Maria Vyas	Fehr & Peers
Preston Stinger	Fehr & Peers

1. Purpose of Plan:
    a. Long term planning for the gravel pit site.
        i. Previous economic analyses have indicated commercial interest toward the site. Wasatch Boulevard connects two major world class ski destinations.
    b. Property owner is mining to an elevation schedule and wondering what UTA's plans are to put rail on corridor. Previous UTA execs have approached Doug in the past about putting a rail hub on his land.
    c. The WFRC 2015 RTP shows BRT on Wasatch/Foothill on phase 1, planned enhanced bus on 3500 South, and other widening projects
    d. UDOT interested in potential project phasing, which would influence timing of transportation improvements.
        i. Traffic analysis will only contain one future year threshold.
2. Scope/Roles
    a. Maria provided an overview of the scope and identified consultant and Steering Committee roles.
3. Upcoming Projects/ Plans/Issues
    a. Doug Shelby
        i. Very interested in what UTA's plans are.
        ii. Time frame for changes is at least five years but they have potential for additional mining beyond that. Doug also has property on the other side of Wasatch that could potentially be mined as well. He has had previous conversations with UDOT to get a signal accessing that property.

iii. Doug has a lot of options for what to do with the site, but hopes this plan will help generate a vision for the property.
iv. Doug hopes that the market analysis for the site will take into account other development existing/proposed in the area that could affect the marketability of this site.
    1. Zions Bank Public Finance (subconsultant to Fehr & Peers for this project) has already done some market analysis in the area which likely addresses these concerns.
v. The phasing of development depends on where UDOT will put access, which needs to relate to internal circulation.

b. Cottonwood Heights
    i. Canyon Center development – City is waiting on development proposal. Current plans include 80KSF office, 144 room hotel, 3 restaurants and retail space.
    ii. Issues related to skier traffic: people want improved boulevard but without more land use.
    iii. Canyon Inn becoming retail.
    iv. Access to gravel pit site needs to be considered (Doug also owns the Old Mill property).
    v. City sees potential for 3 access points, one of which should be full access. Doug has an agreement with UDOT on access points but not a written copy.
        1. Tony Lau could provide a written copy.
    vi. Potential emergency access to site via Tavaci, also may be able to use Gun Club road.

c. UTA
    i. Nothing concrete at this point from UTA's perspective. Some plans for 72nd South for enhanced bus and BRT in the short range plans. Several local and express bus routes are in the area.
    ii. Val/Levi will coordinate with their agencies (WFRC/UTA) to get more information on Mountain Accord.

d. UDOT
    i. Project near the SR-210/SR-190/Wasatch intersection near Little Cottonwood Canyon - making it a high T to accommodate demand during the winter. Project is going into design now. Peter Tang is the Region 2 PM - construction may be next year.
    ii. Big Cottonwood Canyon summer traffic is almost as bad as winter. If UTA operates more bus service in the canyon, does it affect demand at park and rides and would the parking lots need to expand?

e. WFRC
    i. Active transportation access across and along corridor
    ii. Great bike lane on Wasatch, but there should be accommodations for more casual users as well.
    iii. Operational plan on Fort Union- Phase 1 project from Union Park BLVD to 3000 East. Primarily access management, signal timing, minor widening.

4. Action Items

a. Maria to schedule a site visit for the group *(done)*
b. Glen will provide Canyon Center traffic study to Fehr & Peers *(done)*.
c. Maria will double check with Susie Becker at Zions Bank to see if economic analysis will identify phases for development.
d. Preston to request access agreement from Tony Lau.
e. Val/Levi to get more information from WFRC/UTA on Mountain Accord plans.

MINUTES
Wasatch Boulevard Corridor Master Plan
Steering Committee Update Meeting
Cottonwood Heights City Hall
03/31/16 2:30 – 4 pm

Attendees: Glen Goins, Brian Berndt, Callie New, Tony Lau, Val Halford, Levi Roberts, Maria Vyas, Preston Stinger
Via phone: Benj Becker

1. Market analysis results
    a. Benj Becker of ZBPF provided an overview of the process for developing the market analysis.
        i. Brokers/developers expressed concerns about how much land is actually available. Geotech issues, etc.
        ii. ZBPF talked with many brokers and agents who would potentially be interested in the property. Some brokers have talked to the owners, and felt that they may be a little overly optimistic.
        iii. ZBPF also looked what else is available in the market. There is a lot of competition in South Jordan and Draper, and questions about what's happening at the prison site. There will be a lot of people locating in that I-15 corridor in the next 5 years. Interviewees also struggled to envision other uses beyond a gravel pit at the site.
        iv. Few brokers/developers felt like less than 10 stories would be achievable there. Financing for-sale housing products is challenging right now, so the focus has been more on rental units.
        v. Saw a lot of interest in the corner property. (Or as close to the corner as possible.) Possibilities for hotel development.
    b. Brian asked: if they think there is a higher need for hotel, why only 1 hotel?
        i. Benj- everyone is concerned about what the best location would be for a hotel on the corridor and whether the corner of Fort Union/Wasatch would be available for hotel development. Hotel developers are also cautious to project more than 1-2 years in advance. Also, people are concerned about the Chinese buyout of Starwood Hotels and what that means.
    c. Brian- Did they account for what's available in the canyons?
        i. Benj- Yes. Alta's future hotel development depends on Mountain Accord land swap. They are interested in putting up their own lodges. Prices in the canyon are significantly different (higher) though, and there will likely be a need for more affordable hotel rooms.
    d. Brian- did the analysis account for regional parking needs?
        i. Benj- No and parking is a big issue. It is difficult to accommodate the parking given the space and expense of structured parking.

ii. Maria said that the parking space ratio seems high. Where does it come from?
    1. Benj- Industry demands these ratios. They are pushing more people into buildings per square foot so they need more parking. Glen & Brian are comfortable with parking ratios shown in the market analysis.
iii. Brian- does Mountain Accord look at this as the regional parking, and ride for the canyons. Brian- We should be thinking more progressively about how this fits together with Mountain Accord.
    1. Levi- UTA focused on short term solutions? He will talk to Mary DeLoretto and see what the plan is for parking in Mountain Accord projects .

e. Glen- they anticipate more than 250,000 of retail; if it flexes uses, what would it shift to?
    i. Benj- It might pull from office to get more retail. Brokers are optimistic about retail.

2. Traffic Update
    a. Preston explained how the traffic analysis used MXD+ to estimate trip generation for the site. This tool better estimates what traffic is going to be based on use and also transit capture. Project itself will generate 40,000 trips per day.
        i. Brian expressed concern that we are underestimating growth on Wasatch.
        ii. Tony said that historically the growth rates in the Canyons are pretty flat.
        iii. Cottonwood Heights staff are concerned that the volumes shown on Wasatch Boulevard are not high enough, because of the Highland Drive extension that is shown in the 2040 RTP. Cottonwood Heights thinks this route probably won't get built, and traffic will be on Wasatch instead.
    b. 2040 Plus Projects- Preston explained the results of the traffic impact analysis based on the market analysis. The traffic analysis assumed access based on Arch Nexus' plans, but if these are incorrect then Fehr & Peers needs to revise access assumptions.
        i. No one in the group has definitive information on the agreement is for accesses on Wasatch Boulevard (what kind and how many). City staff believe there should be 3 on Wasatch, and Tony agrees. Brian said that the access onto Big Cottonwood Canyon access probably shouldn't be assumed since Salt Lake County and Murray own that land. Fehr & Peers will revise the model to show 3 access on Wasatch and remove the access to Big Cottonwood Canyon.
        ii. Delay is being experienced primarily by traffic leaving the development, but traffic on Wasatch tends to flow. Potential mitigations could include:
            1. Widen Wasatch Boulevard to a 7 lane section, from I215 to fire station. This section could be up to 60,000 ADT.
            2. Also need to deal with the interchange; a quasi high –T intersection at 3000 East and 6200 South may be helpful there.
            3. Grade separate SB Wasatch over FT Union Blvd.

        4. Create a TMA for the project area.
    iii. Glen- the City's big focus is getting more attention and priority in the long range plan. Also, aesthetics is important to the corridor. The City needs to spend some time thinking about their vision for what this corridor should look like, and Maria suggested discussing this at the upcoming Opportunities and Constraints Workshop.
  c. Brian- AJ Dean's property may be limited to access on old Wasatch Blvd.
  d. Tony- Should have 1000 feet spacing between signals. This study could help UDOT and the city establish a corridor agreement for Wasatch and be a unified front against developers. It could answer the question of the number of access and what kind. The City and UDOT are good with using this study as the basis of an agreement.
3. Workshop
  a. Potential additional attendees to the workshop beyond this group:
    i. John Park
    ii. Brad Gilson
4. ET+ Update
  a. Callie and Mike will model two phases of scenarios. Mike is hoping to have them modelled next week.

MINUTES
Wasatch Boulevard Corridor Master Plan
Opportunities and Constraints Workshop
Cottonwood Heights City Hall
4/27/2016 9:00- 11:00AM

Attendees: Glen Goins, Brian Berndt, Callie New, Tony Lau, Val Halford, Cory Shupe, Michael Johnson, Brad Gilson, Sarah Rivera, Zach Smallwood, Maria Vyas, Jon Nepstad, Alex Roy

1. Introductions and Housekeeping
    a. Jon Nepstad of Fehr & Peers introduced the project and highlighted that the purpose of the workshop was to develop a vision for the corridor and identify preferred facility types
    b. Glen Goins of Cottonwood Heights added that Cottonwood Heights was a cog in the Greater Salt Lake Valley, but it was their goal to be a premier location
2. ET+ 101
    a. Callie New of WFRC and Michael Johnson of Cottonwood Heights presented an overview of the ET+ software and results for initial testing of the gravel pit site
        i. ET+ is a scenario evaluation tool that utilizes GIS and Excel features
        ii. ET+ scenarios based on the Gravel Pit Market Analysis were presented
            1. The group asked why the numbers utilized in the ET+ analysis did not reflect the land use presented in the Zions Bank Market Analysis Study.
            2. Callie and Michael explained that the ET+ tool examined land use by "painting" scenarios of various land use mixes. It did not have the capability to enter exact sq. footage estimates.
        iii. Callie, Michael, and Brian Berndt of Cottonwood Heights explained that this analysis was a new application for the ET+ tool and was typically used more as a community planning exercise. WFRC and municipality efforts are ongoing to apply the ET+ tool to more refined scenarios.
        iv. Callie and Michael are going to refine the Cottonwood ET+ analysis based on workshop comments.
3. Peer Corridors by Volume
    a. Jon Nepstad and Alex Roy of Fehr & Peers presented on the existing annual average daily traffic (AADT) and the AADT once the project is developed.
        i. Current AADT is 20,000
        ii. 2040 AADT based on the WFRC Travel Demand Model is 20,500
        iii. Project generated trips are 40,000 based on MXD+ methodology
        iv. 2040 AADT on Wasatch Blvd. will be 50,000 – 60,000 once the site is developed
    b. Jon Nepstad asked the question – What do these numbers mean and how can we put them in context?

        i. Jon and Alex led an exercise looking up roadway AADT
        ii. Facilities with existing AADT comparable to the project Wasatch Blvd. volumes are very limited and include Bangerter, Union Park, and University Ave. in Orem.
4. Common Themes and Prioritization Exercise
    a. Jon explained the various roadway typologies: Expressway, Parkway/Boulevard, Urban Arterial, Urban Transitway, Multi-way Boulevard
    b. Attendees were asked to vote for their preferences
        i. Urban Transitway was the most popular selection, followed by Parkway and Multiway Blvd.
        ii. Tony Lau from UDOT identified himself as the lone vote against Multiway Blvd., and explained while he liked and appreciated the concept for more urban locations he said that he did not think that this was the best fit for the corridor.
    c. A discussion followed identifying how the Multiway Blvd would function
    d. Constraints identified by the attendees included: future volumes, need for additional through lanes in the future, desire to have this area remain bike friendly
    e. Opportunities identified by the attendees included: the opportunity to create a unique vision for the area, recent updated code for the project site, time to plan for the future rather than react, a location with spectacular views, access to world class skiing, a land owner who is involved and understands the importance of planning
5. Bringing it All Together
    a. Cory Shupe presented preliminary designs for the site plan
        i. Cory detailed the different land uses, accesses, and outlined how the site was planned to work in terms of use and traffic
        ii. Tony stated that the preliminary site meets UDOTs access regulations, but stressed that this does not mean that the project has UDOT approval yet
    b. Jon thanked everybody for attending and informed the group that the next step will be providing preliminary roadway concepts and project vision based on what was heard in the workshop.

MINUTES
Wasatch Boulevard Corridor Master Plan
Final Steering Committee Meeting
Cottonwood Heights City Hall
09/15/16

Attendees: Brian Berndt, Callie New, Mike Johnson, Patrick Cowley, Levi Roberts, Val Halford, Maria Vyas

1. Project Update
    a. Project analysis and report preparation has been completed
    b. City Council presentation was held in June 2016
        i. There is no further feedback from City Council
2. Review of Land Use
    a. Maria provided an overview of the land use concepts created by blu line designs in collaboration with the City. Comments are below:
        i. Levi asked whether shared parking is considered in the analysis; there is not currently a shared parking plan in place for the site, but it is one of the recommendations in the report for moving forward.
        ii. Levi pointed out that bus routes in and out would need to move quickly, but that UTA is comfortable with how circulation is currently laid out.
        iii. Brian mentioned that the property owner of the gravel pit wants to connect to Big Cottonwood Canyon road through the existing park and ride
        iv. Callie would like to see more interaction between land use and Wasatch Boulevard, and more connectivity with pedestrians within the site and across the street.
        v. Brian mentioned that the property owner has additional plans for the property across the street, and this may change how circulation occurs.
3. Streetscapes
    a. Maria provided a review of two cross section options for Wasatch Boulevard near the gravel pit site. Comments from the steering committee are below:
        i. Patrick- the difficulty with center running transit is getting people across from the center, and stops at intersections have left turn conflicts.
        ii. Levi- UTA would prefer center running if they had enough room. Doesn't force people to cross as far of a distance to get to the stations.
        iii. Brian- concerned about being able to continue consistency of service/type southward on Wasatch. How can it be adapted to apply south of Fort Union Blvd.?
        iv. Callie- would be interested to see 11' lanes on both options.
            1. Patrick- 11 lanes would require a design exception but may be acceptable if truck traffic is low and there isn't a lot of side friction.

v. Brian- will UDOT make a recommendation for cross section?
    1. Patrick- will take planning exercises under advisement, and views it as a good due diligence exercise. Patrick will work with Jeff Harris on getting corridor planning started for Wasatch to ensure coordination continues. It may be possible to establish a corridor agreement with thresholds for when improvements get triggered. Brian would want analysis showing whether giving a lane to transit would carry enough through traffic to remove traffic lane.

b. Follow up actions
    i. Maria will circulate the Word version of the draft plan.
    ii. Levi will look into long-term plans for transit service on east side.
    iii. Callie will work on integrating the I-215 interchange into RTP scenarios.
    iv. Cottonwood Heights and UDOT will continue coordination and discussions regarding Wasatch Boulevard.
    v. Maria will schedule a follow-up meeting with UDOT on the traffic analysis for the I-215 interchange.